C.I.P.	57TK Country of Origin: RU	TAB. X Date 17-05-17 Revision

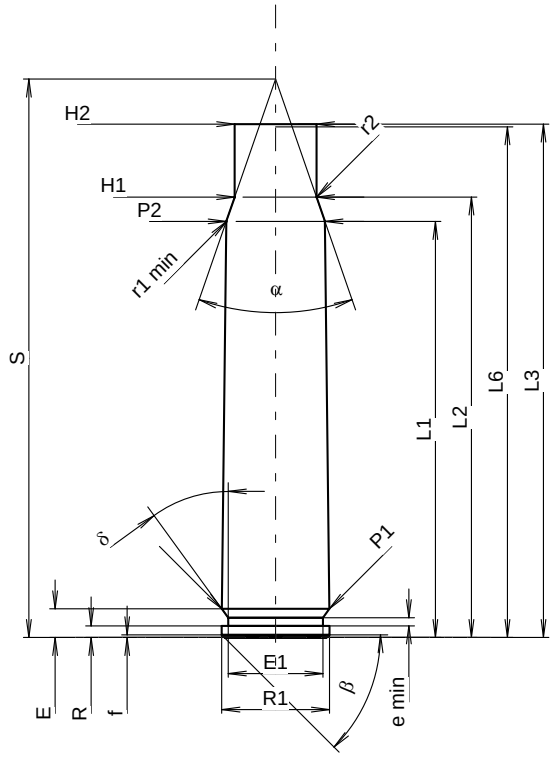

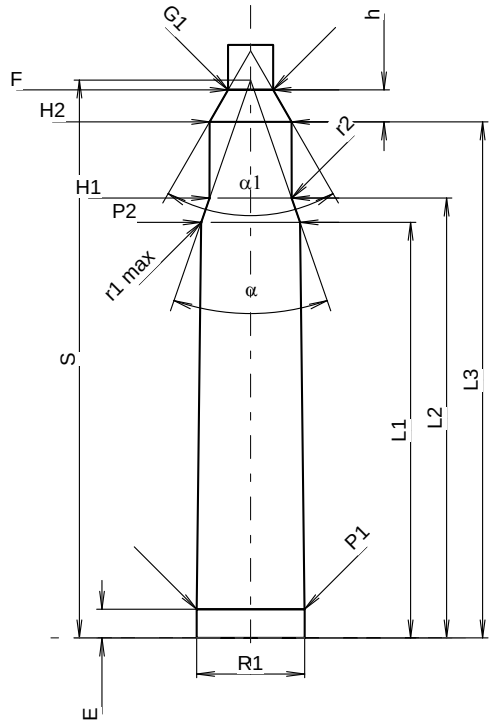

Scale 1.19:1

CARTRIDGE MAXI

Lengths

L1	=	46.20	-0.20
L2	=	48.90	-0.20
L3 1)	=	57.00	
L4	=		
L5	=		
L6	=	56.70	

Case Head

R	=	1.30
R1	=	11.95
R3	=	
E	=	3.19
E1	=	10.50
e min	=	0.90
δ	=	36°
f	=	0.30
β	=	45°

Powder Chamber

P1	=	11.94	
P2 *	=	10.95	-0.20

Junction Cone

α *	=	38°12'6"
S	=	62.01
r1 min	=	0.50
r2	=	0.50

Collar

H1 *	=	9.08
H2 1)	=	9.08

Projectile

G1	=	
G2	=	
F	=	
L3+G 1)	=	57.00

Pressures (Energies)
Method Transducer

Pmax	=	1800	bar
PK	=	2070	bar
PE	=	2340	bar
M	=	25.00	

Miscellaneous Dimensions

Fe 1)3)	=	0.15
delta L	=	0.02

CHAMBER MINI

Lengths

L1	=	46.15
L2	=	48.84
L3	=	57.30

Breech

R	=	1.30
R1	=	12.00
R2	=	
R3	=	
r	=	

Powder Chamber

E	=	3.19
P1	=	11.97
P2 *	=	10.98

Junction Cone

α	=	38°19'59"
S *	=	61.95
r1 max	=	0.50
r2	=	0.50

Collar

H1 *	=	9.11
H2 1)	=	9.10

Commencement of Rifling

G1 1)*	=	5.00
G	=	
α1	=	60°
h *	=	3.55
s	=	
i	=	
w	=	

Barrel

F 1)*	=	5.00
Z	=	

Grooves

b	=		
N	=		
u	=		
Q	=	19.63	mm²

Dimensions in << mm >>
Dimensions and Tolerances for Proof Barrels
see Appendix CR 5.

Notes:
1) Check for safety reasons
2) Valid only for Proof barrels
3) Headspace on Shoulder
* Basic dimensions