C.I.P.	35 Blanc Country of Origin: DE	TAB. VIII Date 92-03-12 Revision 94-06-01

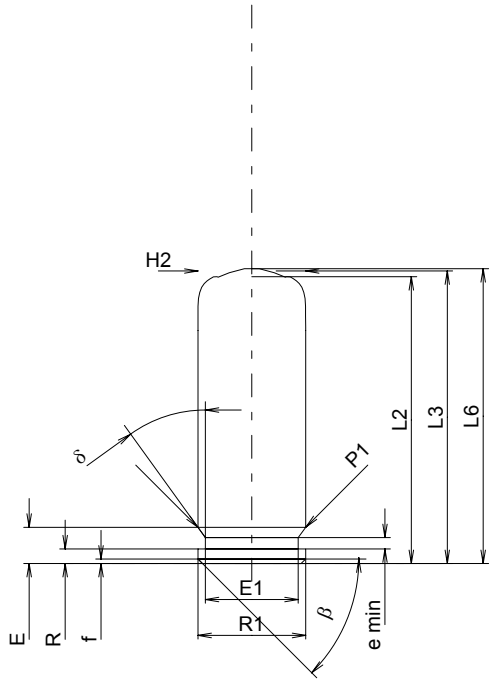

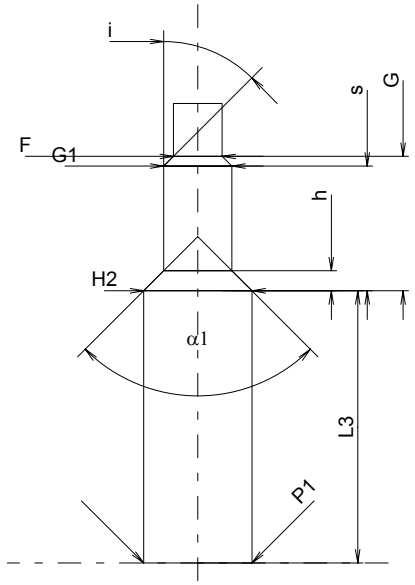

Scale 1.5:1

CARTRIDGE MAXI

Lengths

L1	=	
L2 *	=	25.30
L3 1)	=	25.80
L4	=	
L5	=	
L6 1)	=	26.00

Case Head

R	=	1.30
R1	=	9.50
R3	=	
E	=	3.20
E1	=	8.20
e min	=	1.00
δ	=	40°
f	=	0.40
β	=	45°

Powder Chamber

P1	=	9.50
P2	=	

Junction Cone

α	=	
S	=	
r1 min	=	
r2	=	

Collar

H1	=	
H2 1)	=	9.50

Projectile

G1	=	
G2	=	
F	=	
L3+G	=	

Pressures (Energies)
Method Transducer

Pmax	=	450	bar
PK	=	518	bar
PE	=	585	bar
M	=	8.50	

Miscellaneous Dimensions

Fe	=	
delta L	=	

CHAMBER MINI

Lengths

L1	=	
L2	=	
L3 1)	=	24.00

Breech

R	=	
R1	=	
R2	=	
R3	=	
r	=	

Powder Chamber

E	=		
P1 1)	=	9.55	+0.20
P2	=		

Junction Cone

α	=	
S	=	
r1 max	=	
r2	=	

Collar

H1	=	
H2 1)	=	9.55

Commencement of Rifling

G1 2)*	=	6.00
G 2)*	=	11.85
α1	=	90°
h	=	1.77
s *	=	11.00
i	=	45°
w	=	

Barrel

F 2)*	=	4.30
Z	=	4.30

Grooves

b	=		
N	=		
u	=		
Q 2)	=	14.52	mm²

Dimensions in << mm >>
Dimensions and Tolerances for Proof Barrels
see Appendix CR 5.

Notes:
1) Check for safety reasons
2) Valid only for Proof Barrels
* Basic dimensions