C.I.P.	320 Court Blanc Country of Origin: DE	TAB.	VIII
		Date	91-07-29
		Revision	94-03-01

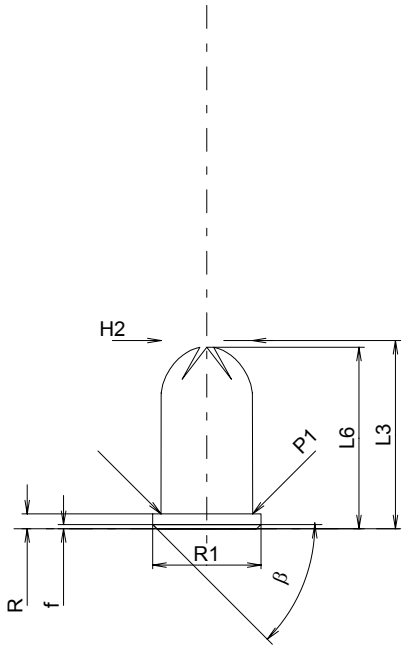

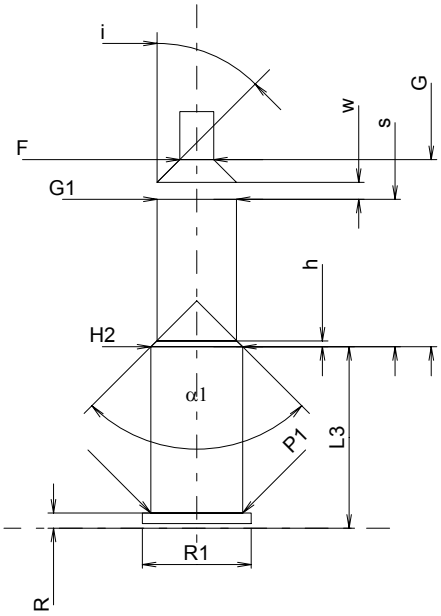

Scale 1.5:1

CARTRIDGE MAXI

Lengths

L1	=	
L2	=	
L3 1)	=	16.60
L4	=	
L5	=	
L6 1)	=	16.00

Case Head

R	=	1.32
R1	=	9.55
R3	=	
E	=	
E1	=	
e min	=	
δ	=	
f	=	0.38
β	=	45°

Powder Chamber

P1	=	8.09
P2	=	

Junction Cone

α	=	
S	=	
r1 min	=	
r2	=	

Collar

H1	=	
H2 1)	=	8.05

Projectile

G1	=	
G2	=	
F	=	
L3+G	=	

Pressures (Energies)
Method Transducer

Pmax	=	250	bar
PK	=	288	bar
PE	=	325	bar
M	=	7.50	

Miscellaneous Dimensions

Fe	=	
delta L	=	

CHAMBER MINI

Lengths

L1	=	
L2	=	
L3 1)	=	16.00

Breech

R 1)	=	1.35
R1	=	9.60
R2	=	
R3	=	
r	=	

Powder Chamber

E	=	
P1 1)	=	8.10
P2	=	

Junction Cone

α	=	
S	=	
r1 max	=	
r2	=	

Collar

H1	=	
H2 1)	=	8.10

Commencement of Rifling

G1 2)*	=	7.00
G 2)*	=	16.50
α1	=	90°
h	=	0.50
s *	=	13.00
i	=	45°
w	=	1.50

Barrel

F 2)*	=	3.00
Z	=	3.00

Grooves

b	=		
N	=		
u	=		
Q 2)	=	7.07	mm²

Dimensions in << mm >>
Dimensions and Tolerances for Proof Barrels
see Appendix CR 5.

Notes:
1) Check for safety reasons
2) Valid only for Proof Barrels
* Basic dimensions