C.I.P.	22 Long Blanc Country of Origin: IT	TAB. VIII Date 91-08-02 Revision 94-03-01

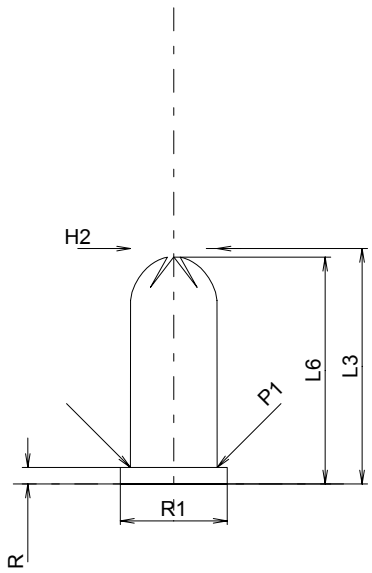

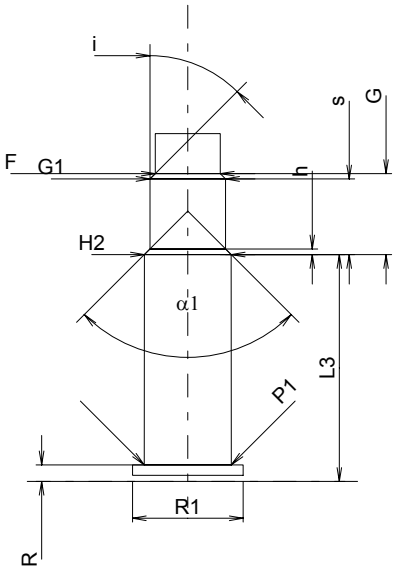

Scale 2:1

CARTRIDGE MAXI

Lengths

L1	=	
L2	=	
L3 1)	=	15.57
L4	=	
L5	=	
L6 1)	=	15.00

Case Head

R	=	1.09
R1	=	7.06
R3	=	
E	=	
E1	=	
e min	=	
δ	=	
f	=	
β	=	

Powder Chamber

P1	=	5.74
P2	=	

Junction Cone

α	=	
S	=	
r1 min	=	
r2	=	

Collar

H1	=	
H2 1)	=	5.72

Projectile

G1	=	
G2	=	
F	=	
L3+G	=	

Pressures (Energies)
Method Transducer

Pmax	=	500	bar
PK	=	575	bar
PE	=	650	bar
M	=	7.00	

Miscellaneous Dimensions

Fe	=	
delta L	=	

CHAMBER MINI

Lengths

L1	=	
L2	=	
L3 1)	=	15.00

Breech

R 1)	=	1.09
R1	=	7.32
R2	=	
R3	=	
r	=	

Powder Chamber

E	=	
P1 1)	=	5.76
P2	=	

Junction Cone

α	=	
S	=	
r1 max	=	
r2	=	

Collar

H1	=	
H2 1)	=	5.74

Commencement of Rifling

G1 2)*	=	5.00
G 2)*	=	5.35
α1	=	90°
h	=	0.37
s *	=	5.00
i	=	45°
w	=	

Barrel

F 2)*	=	4.30
Z	=	4.30

Grooves

b	=		
N	=		
u	=		
Q 2)	=	14.52	mm²

Dimensions in << mm >>
Dimensions and Tolerances for Proof Barrels
see Appendix CR 5.

Notes:
1) Check for safety reasons
2) Valid only for Proof Barrels
* Basic dimensions