C.I.P.	9 mm PA Blanc Country of Origin: DE	TAB. VIII Date 91-07-30 Revision 94-03-01

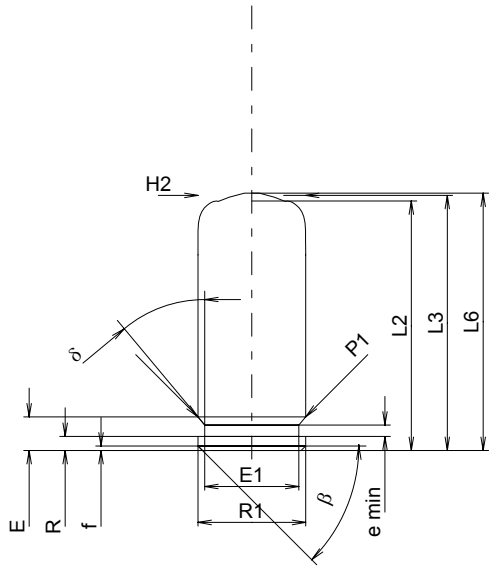

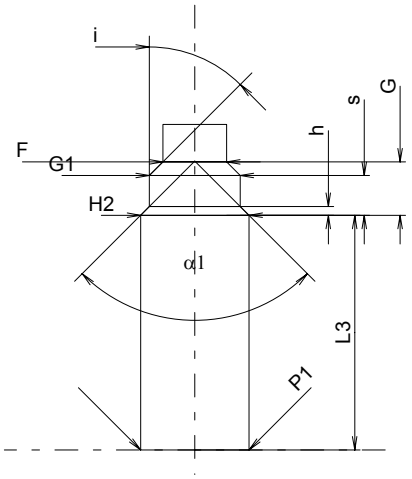

Scale 1.5:1

CARTRIDGE MAXI

Lengths

L1	=	
L2 *	=	22.00
L3 1)	=	22.50
L4	=	
L5	=	
L6 1)	=	22.70

Case Head

R	=	1.25
R1	=	9.50
R3	=	
E	=	2.97
E1	=	8.30
e min	=	1.00
δ	=	40°
f	=	0.40
β	=	45°

Powder Chamber

P1	=	9.50
P2	=	

Junction Cone

α	=	
S	=	
r1 min	=	
r2	=	

Collar

H1	=	
H2 1)	=	9.50

Projectile

G1	=	
G2	=	
F	=	
L3+G	=	

Pressures (Energies)
Method Transducer

Pmax	=	400	bar
PK	=	460	bar
PE	=	520	bar
M	=	8.50	

Miscellaneous Dimensions

Fe	=	
delta L	=	

CHAMBER MINI

Lengths

L1	=	
L2	=	
L3 1)	=	20.70

Breech

R	=	
R1	=	
R2	=	
R3	=	
r	=	

Powder Chamber

E	=	
P1 1)	=	9.55
P2	=	

Junction Cone

α	=	
S	=	
r1 max	=	
r2	=	

Collar

H1	=	
H2 1)	=	9.55

Commencement of Rifling

G1 2)*	=	8.00
G 2)*	=	4.70
α1	=	90°
h	=	0.77
s *	=	3.50
i	=	45°
w	=	

Barrel

F 2)*	=	5.60
Z	=	5.60

Grooves

b	=		
N	=		
u	=		
Q 2)	=	24.63	mm²

Dimensions in << mm >>
Dimensions and Tolerances for Proof Barrels
see Appendix CR 5.

Notes:
1) Check for safety reasons
2) Valid only for Proof Barrels
* Basic dimensions