C.I.P.	4 mm Randz. court Blanc Country of Origin: DE	TAB. VIII Date 92-03-12 Revision 92-06-10

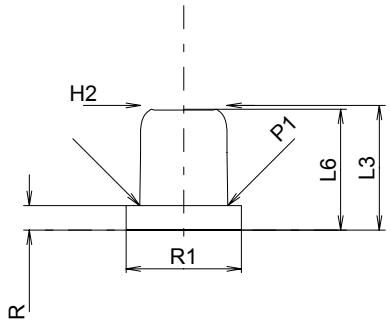

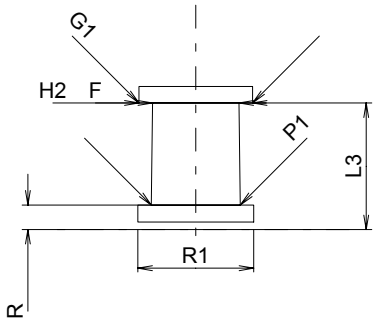

Scale 2.5:1

CARTRIDGE MAXI

Lengths

L1	=	
L2	=	
L3 1)	=	6.60
L4	=	
L5	=	
L6 1)	=	6.40

Case Head

R	=	1.30
R1	=	6.10
R3	=	
E	=	
E1	=	
e min	=	
δ	=	
f	=	
β	=	

Powder Chamber

P1	=	4.65
P2	=	

Junction Cone

α	=	
S	=	
r1 min	=	
r2	=	

Collar

H1	=	
H2 1)	=	4.58

Projectile

G1	=	
G2	=	
F	=	
L3+G	=	

Pressures (Energies)

Energy

Emax	=	30.0	Joule
EK	=	32.1	Joule
EE	=	34.5	Joule

Miscellaneous Dimensions

Fe	=	
delta L	=	

CHAMBER MINI

Lengths

L1	=	
L2	=	
L3 1)	=	6.70

Breech

R 1)	=	1.30
R1	=	6.13
R2	=	
R3	=	
r	=	

Powder Chamber

E	=	
P1 1)	=	4.70
P2	=	

Junction Cone

α	=	
S	=	
r1 max	=	
r2	=	

Collar

H1	=	
H2 1)	=	4.58

Commencement of Rifling

G1 2)*	=	6.00	
G	=		
α1	=	180°	
h	=		
s	=		
i	=		
w	=		

Barrel

F 2)*	=	6.00	
Z	=	6.00	

Grooves

b	=		
N	=		
u	=		
Q 2)	=	28.27	mm²

Dimensions in << mm >>
Dimensions and Tolerances for Proof Barrels
see Appendix CR 5.

Notes:
1) Check for safety reasons
2) Valid only for Proof Barrels
* Basic dimensions

Reproduction forbidden as well as in the form of extracts without approval of C.I.P.