C.I.P.	9mm Flobert à plombs Carton Country of Origin: FR	TAB. V Date 84-06-14 Revision 00-06-07

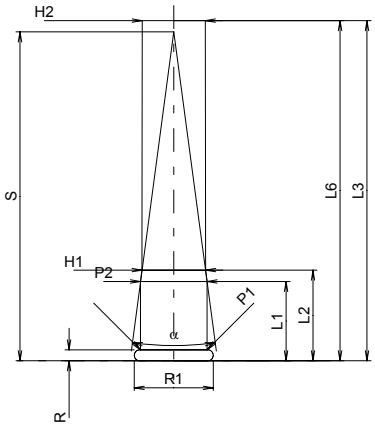

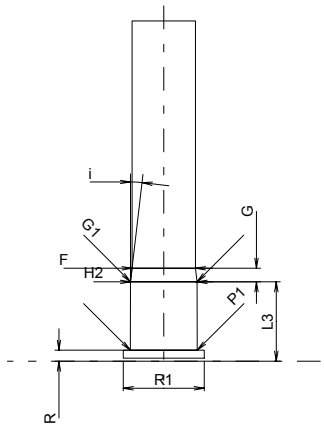

Scale 1:1

CARTRIDGE MAXI

Lengths

L1 *	=	10.50	
L2 *	=	12.00	
L3 1)	=	45.00	
L4	=		
L5	=		
L6	=	45.00	

Case Head

R 1)	=	1.45	-0.18
R1	=	10.45	
R3	=		
E	=		
E1	=		
e min	=		
δ	=		
f	=		
β	=		

Powder Chamber

P1	=	8.80
P2 *	=	8.80

Junction Cone

α	=	15°11'24"
S	=	43.50
r1 min	=	
r2	=	

Collar

H1 *	=	8.40
H2 1)	=	8.35

Projectile

G1	=	
G2	=	
F	=	
L1+G 1)	=	12.30

Pressures (Energies)
Method Crusher

Pmax	=	900	bar
PK	=	1035	bar
PE	=	1170	bar
M	=	12.50	

Miscellaneous Dimensions

Fe 1)	=	0.20
delta L	=	

CHAMBER MINI

Lengths

L1	=	
L2	=	
L3 1)	=	10.50

Breech

R 1)	=	1.45
R1	=	10.70
R2	=	
R3	=	
r	=	

Powder Chamber

E	=	
P1 1)	=	8.85
P2	=	

Junction Cone

α	=	
S	=	
r1 max	=	
r2	=	

Collar

H1	=	
H2 1)	=	8.80

Commencement of Rifling

G1 *	=	8.80
G *	=	1.80
α1	=	
h	=	
s	=	
i	=	6°39'15"
w	=	

Barrel

F 1)*	=	8.38
Z 1)	=	8.38

Grooves

b	=		
N	=		
u	=		
Q	=	55.15	mm²

Dimensions in << mm >>
Dimensions and Tolerances for Proof Barrels
see Appendix CR 2.

Notes: 1) Check for safety reasons
* Basic dimensions