C.I.P.	22 Win. Auto Country of Origin: US	TAB.	V
		Date	84-06-14
		Revision	00-06-07

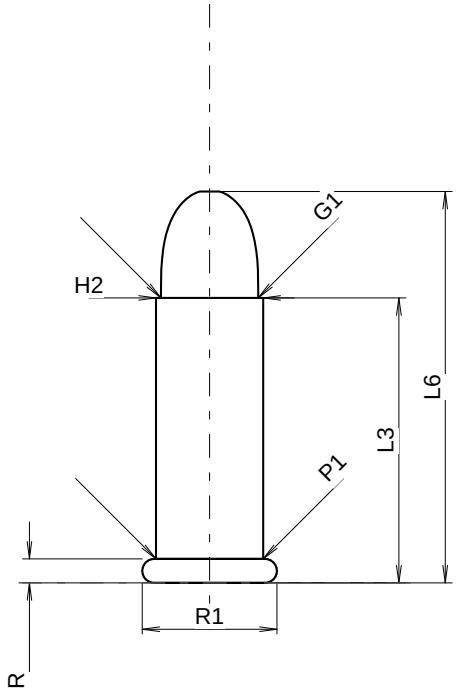

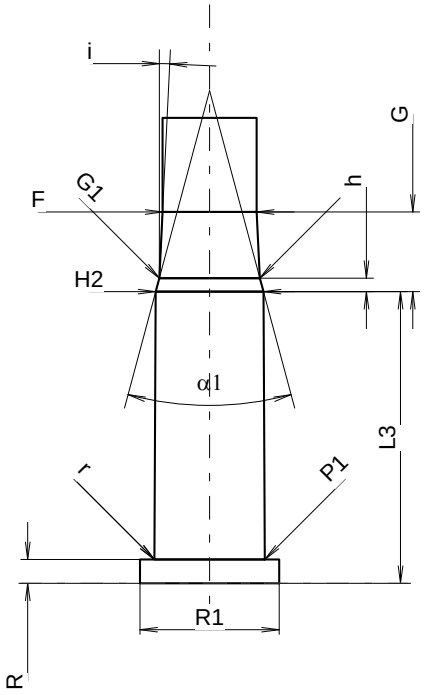

Scale 2.23:1

CARTRIDGE MAXI

Lengths

L1	=		
L2	=		
L3 1)	=	16.92	
L4	=		
L5	=		
L6	=	23.24	

Case Head

R 1)	=	1.42	-0.18
R1	=	8.00	
R3	=		
E	=		
E1	=		
e min	=		
δ	=		
f	=		
β	=		

Powder Chamber

P1	=	6.36
P2	=	

Junction Cone

α	=	
S	=	
r1 min	=	
r2	=	

Collar

H1	=	
H2 1)	=	6.36

Projectile

G1 1)	=	5.78
G2	=	
F	=	
L3+G 1)	=	21.65

Pressures (Energies)
Method Crusher

Pmax	=	1000	bar
PK	=	1150	bar
PE	=	1300	bar
M	=	18.72	

Miscellaneous Dimensions

Fe 1)	=	0.20
delta L	=	

CHAMBER MINI

Lengths

L1	=	
L2	=	
L3 1)	=	17.32

Breech

R 1)	=	1.42
R1	=	8.26
R2	=	
R3	=	
r	=	0.13

Powder Chamber

E	=	
P1 1)	=	6.55
P2	=	

Junction Cone

α	=	
S	=	
r1 max	=	
r2	=	

Collar

H1	=	
H2 1)	=	6.40

Commencement of Rifling

G1 *	=	5.97	
G	=	4.73	
α1 *	=	30°	
h	=	0.80	
s	=		
i *	=	2°46'	
w	=		

Barrel

F 1)*	=	5.59	
Z 1)	=	5.74	

Grooves

b	=	1.70	
N	=	6	
u	=	356.00	
Q	=	25.32	mm²

Dimensions in << mm >>
Dimensions and Tolerances for Proof Barrels
see Appendix CR 2.

Notes: 1) Check for safety reasons
* Basic dimensions