C.I.P.	22 Extra L.R. Country of Origin: US	TAB.	V
		Date	89-09-08
		Revision	00-06-07

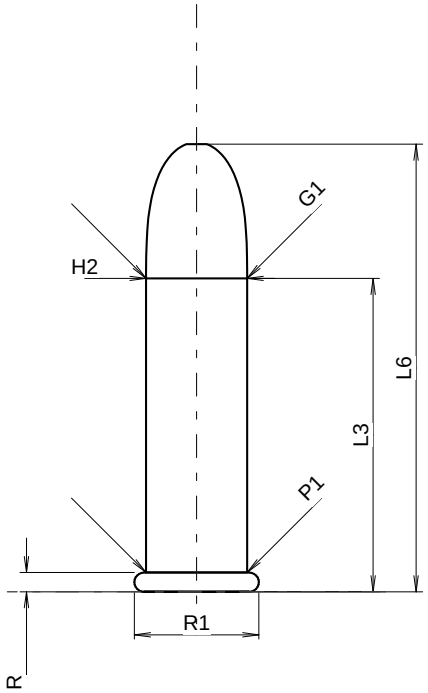

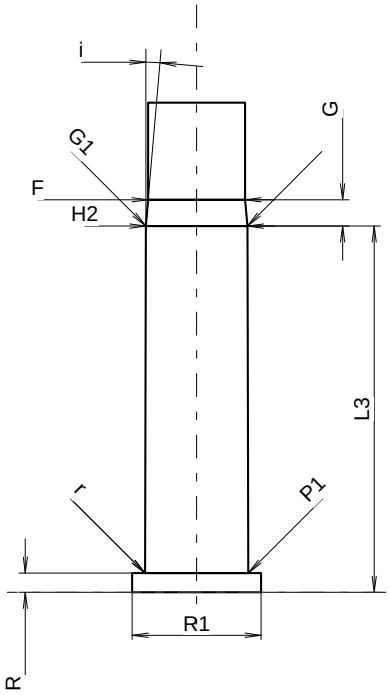

Scale 2.33:1

CARTRIDGE MAXI

Lengths

L1	=		
L2	=		
L3 1)	=	17.78	
L4	=		
L5	=		
L6	=	25.40	

Case Head

R 1)	=	1.09	-0.18
R1	=	7.06	
R3	=		
E	=		
E1	=		
e min	=		
δ	=		
f	=		
β	=		

Powder Chamber

P1	=	5.74
P2	=	

Junction Cone

α	=	
S	=	
r1 min	=	
r2	=	

Collar

H1	=	
H2 1)	=	5.74

Projectile

G1 1)	=	5.73
G2	=	
F	=	
L3+G 1)	=	19.27

Pressures (Energies)
Method Crusher

Pmax	=	1800	bar
PK	=	2070	bar
PE	=	2340	bar
M	=	19.58	

Miscellaneous Dimensions

Fe 1)	=	0.20
delta L	=	

CHAMBER MINI

Lengths

L1	=	
L2	=	
L3 1)	=	20.78

Breech

R 1)	=	1.09
R1	=	7.32
R2	=	
R3	=	
r	=	0.13

Powder Chamber

E	=	
P1 1)	=	5.86
P2	=	

Junction Cone

α	=	
S	=	
r1 max	=	
r2	=	

Collar

H1	=	
H2 1)	=	5.77

Commencement of Rifling

G1 *	=	5.77	
G	=	1.49	
α1	=		
h	=		
s	=		
i *	=	5°	
w	=		

Barrel

F 1)*	=	5.51	
Z 1)	=	5.64	

Grooves

b	=	2.16	
N	=	6	
u	=	406.00	
Q	=	24.71	mm²

Dimensions in << mm >>
Dimensions and Tolerances for Proof Barrels
see Appendix CR 2.

Notes: 1) Check for safety reasons
* Basic dimensions