C.I.P.	17 WSM Country of Origin: US	TAB. V Date 16-05-18 Revision

Alternative Names: 17 Winchester Super Magnum, 17 Win. Super Mag.

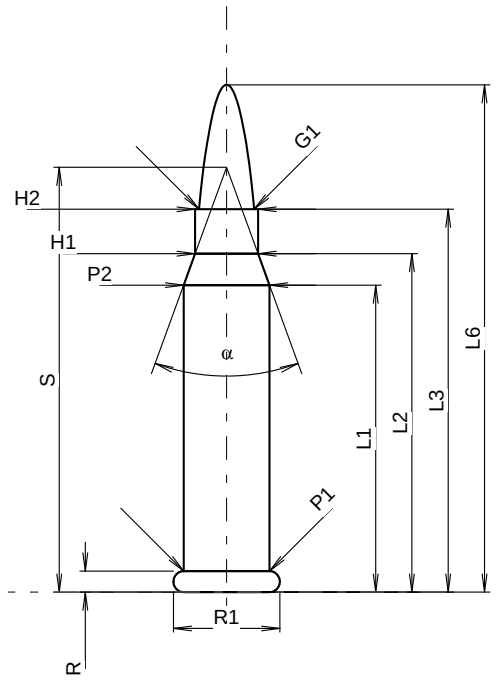

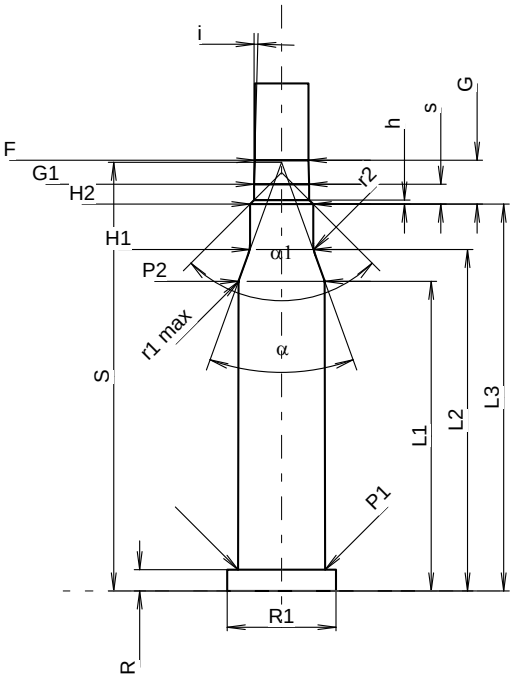

Scale 1.66:1

CARTRIDGE MAXI

Lengths

L1	=	24.44	
L2	=	26.95	
L3 1)	=	30.48	
L4	=		
L5	=		
L6	=	40.39	

Case Head

R 1)	=	1.68	-0.18
R1	=	8.46	
R3	=		
E	=		
E1	=		
e min	=		
δ	=		
f	=		
β	=		

Powder Chamber

P1	=	6.83
P2 *	=	6.83

Junction Cone

α *	=	40°
S *	=	33.82
r1 min	=	
r2	=	

Collar

H1 *	=	5.00
H2 1)	=	5.00

Projectile

G1 1)	=	4.38
G2	=	
F	=	
L3+G 1)	=	33.97

Pressures (Energies)
Method Transducer

Pmax	=	2200	bar
PK	=	2530	bar
PE	=	2860	bar
M	=	17.50	
EE	=	515	Joule

Miscellaneous Dimensions

Fe 1)4)	=	0.15
delta L	=	

CHAMBER MINI

Lengths

L1 1)	=	24.64
L2	=	27.17
L3 1)	=	30.78

Breech

R 1)	=	1.68
R1	=	8.66
R2	=	
R3	=	
r	=	

Powder Chamber

E	=	
P1 1)	=	6.91
P2 *	=	6.86

Junction Cone

α *	=	39°46'
S *	=	34.12
r1 max	=	0.64
r2	=	2.79

Collar

H1 *	=	5.03
H2 1)	=	5.03

Commencement of Rifling

G1 1)*	=	4.37
G 1)	=	3.49
α1	=	90°
h	=	0.33
s *	=	1.58
i 1)*	=	1°30'
w	=	

Barrel

F 1)*	=	4.27
Z 1)	=	4.37

Grooves

b	=	1.57	
N	=	6	
u	=	229.00	
Q	=	14.80	mm²

Dimensions in << mm >>
Dimensions and Tolerances for Proof Barrels
see Appendix CR 2.

Notes:
1) Check for safety reasons
4) Headspace on Rim
* Basic dimensions