C.I.P.	44 Rem. Mag. (carb) Country of Origin: US	TAB. IV Date 86-12-14 Revision 95-05-10

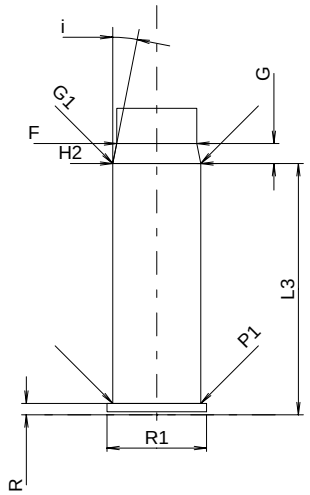

Scale 1:1

Dimensions in << mm >>

CARTRIDGE MAXI

Lengths

L1	=	
L2	=	
L3	=	
L4	=	
L5	=	
L6	=	

Case Head

R	=	
R1	=	
R3	=	
E	=	
E1	=	
e min	=	
δ	=	
f	=	
β	=	

Powder Chamber

P1	=	
P2	=	

Junction Cone

α	=	
S	=	
r1 min	=	
r2	=	

Collar

H1	=	
H2	=	

Projectile

G1	=	
G2	=	
F	=	
L3+G	=	

Pressures (Energies)

Miscellaneous Dimensions

Fe 1)	=	0.15
delta L	=	

CHAMBER MINI

Lengths

L1	=	
L2	=	
L3 1)	=	33.23

Breech

R 1)	=	1.52
R1	=	13.18
R2	=	
R3	=	
r	=	

Powder Chamber

E	=	
P1 1)	=	11.66
P2	=	

Junction Cone

α	=	
S	=	
r1 max	=	
r2	=	

Collar

H1	=	
H2 1)	=	11.63

Commencement of Rifling

G1 1)*	=	11.63
G 1)	=	2.65
$\alpha 1$ *	=	
h	=	
s	=	
i 1)*	=	11°6'
w	=	

Barrel

F 1)*	=	10.59
Z 1)	=	10.90

Grooves

b	=	2.73	
N	=	6	
u	=	508.00	
Q	=	90.65	mm²

Notes: 1) Check for safety reasons
* Basic dimensions