C.I.P.	7 mm Weath. Mag.	TAB.	III
		Date	84-06-14
	Country of Origin: US	Revision	02-05-15

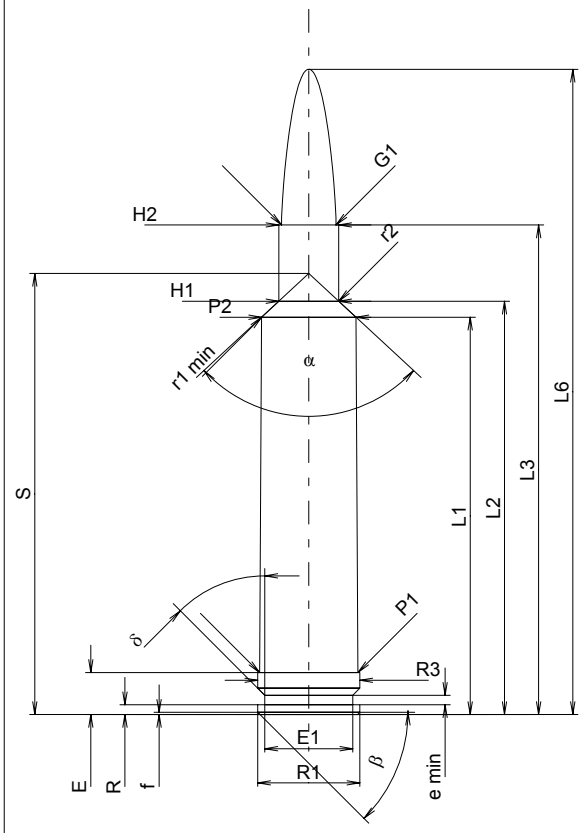

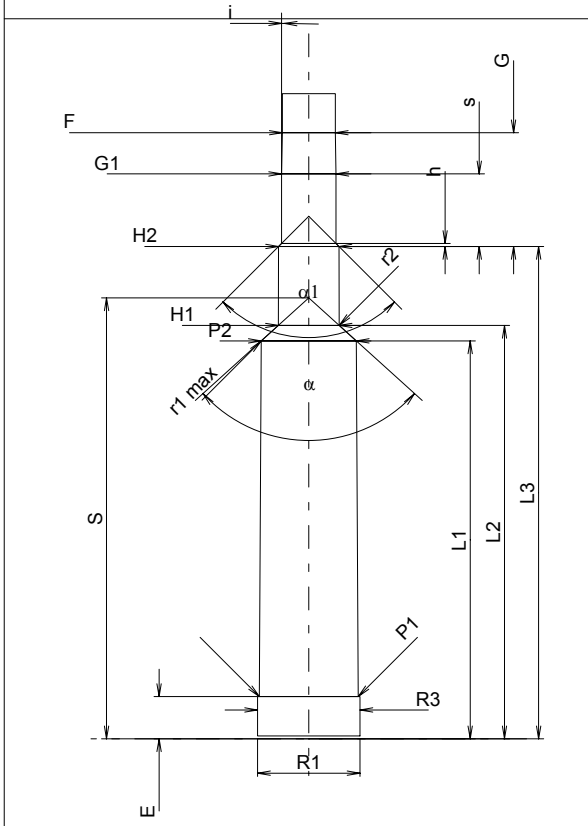

Scale 1:1

CARTRIDGE MAXI

Lengths

L1	=	52.55	
L2	=	54.66	
L3 1)	=	64.74	
L4	=		
L5	=		
L6	=	85.34	

Case Head

R	=	1.30	
R1	=	13.50	
R3	=	13.50	
E 1)	=	5.56	-0.20
E1	=	11.61	
e min	=	1.24	
δ	=	45°	
f	=	0.30	
β	=	45°	

Powder Chamber

P1	=	13.00
P2 *	=	12.49

Junction Cone

α *	=	94°17'35"
S *	=	58.34
r1 min	=	3.30
r2	=	3.84

Collar

H1 *	=	7.92
H2 1)	=	7.92

Projectile

G1 1)	=	7.22
G2	=	
F	=	
L3+G 1)	=	79.78

Pressures (Energies)
Method Transducer

Pmax	=	4400	bar
PK	=	5060	bar
PE	=	5500	bar
M	=	25.00	
EE	=	5040	Joule

Miscellaneous Dimensions

Fe 1)	=	0.10
delta L	=	

CHAMBER MINI

Lengths

L1	=	52.64
L2	=	54.69
L3 1)	=	65.13

Breech

R	=	
R1	=	13.56
R2	=	
R3	=	13.56
r	=	

Powder Chamber

E 1)	=	5.59
P1 1)	=	13.06
P2 *	=	12.58

Junction Cone

α *	=	95°45'07"
S *	=	58.33
r1 max	=	3.05
r2	=	3.84

Collar

H1 *	=	8.06
H2 1)	=	8.00

Commencement of Rifling

G1 1)*	=	7.22
G 1)	=	15.04
α1 *	=	90°
h	=	0.39
s	=	9.60
i 1)*	=	1°01'59"
w	=	

Barrel

F 1)*	=	7.02
Z 1)	=	7.21

Grooves

b	=	2.87	
N	=	6	
u	=	254.00	
Q	=	40.39	mm²

Dimensions in << mm >>
Dimensions and Tolerances for Proof Barrels
see Appendix CR 1.

Notes: 1) Check for safety reasons
* Basic dimensions

Reproduction forbidden as well as in the form of extracts without approval of C.I.P.