C.I.P.	38-40 Win.	TAB.	II
		Date	84-06-14
	Country of Origin: US	Revision	02-05-15

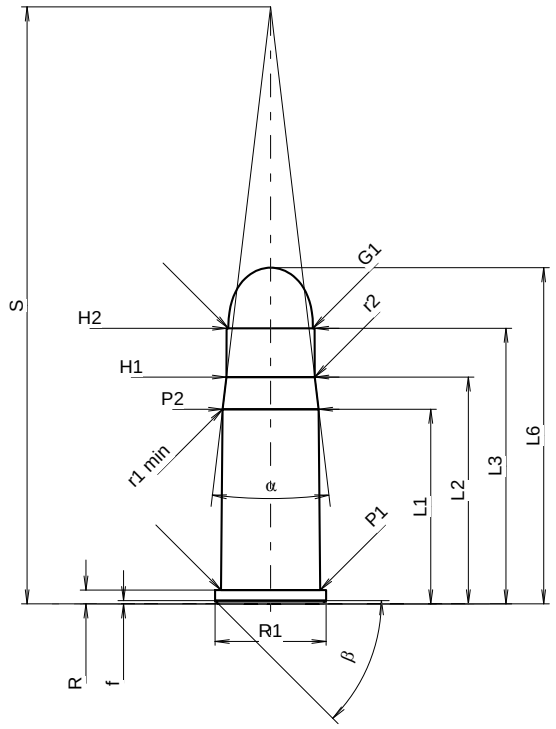

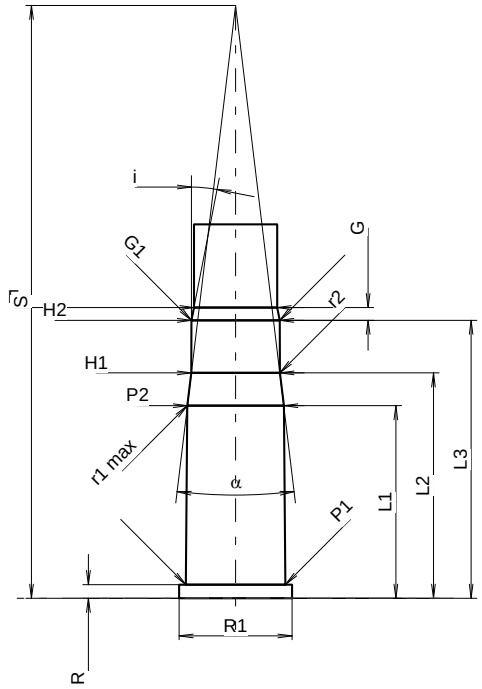

Scale 1.1:1

CARTRIDGE MAXI

Lengths

L1	=	23.42	
L2	=	27.28	
L3 1)	=	33.15	
L4	=		
L5	=		
L6	=	40.44	

Case Head

R 1)	=	1.65	-0.25
R1	=	13.34	
R3	=		
E	=		
E1	=		
e min	=		
δ	=		
f	=	0.38	
β	=	45°	

Powder Chamber

P1	=	11.93
P2 *	=	11.54

Junction Cone

α *	=	13°36'
S *	=	71.81
r1 min	=	17.53
r2	=	13.72

Collar

H1 *	=	10.62
H2 1)	=	10.58

Projectile

G1 1)	=	10.17
G2	=	
F	=	
L3+G 1)	=	34.69

Pressures (Energies)
Method Transducer

Pmax	=	1150	bar
PK	=	1323	bar
PE	=	1440	bar
M	=	17.50	
EE	=	1945	Joule

Miscellaneous Dimensions

Fe 1)4)	=	0.15
delta L	=	

CHAMBER MINI

Lengths

L1	=	23.18
L2	=	27.12
L3 1)	=	33.45

Breech

R 1)	=	1.65
R1	=	13.59
R2	=	
R3	=	
r	=	

Powder Chamber

E	=	
P1 1)	=	11.96
P2 *	=	11.60

Junction Cone

α *	=	13°44'
S *	=	71.34
r1 max	=	17.53
r2	=	13.72

Collar

H1 *	=	10.65
H2 1)	=	10.61

Commencement of Rifling

G1 1)*	=	10.61
G 1)	=	1.54
α1	=	180°
h	=	
s	=	
i 1)*	=	11°
w	=	

Barrel

F 1)*	=	10.01
Z 1)	=	10.16

Grooves

b	=	3.14	
N	=	6	
u	=	914.00	
Q	=	80.13	mm²

Dimensions in << mm >>
Dimensions and Tolerances for Proof Barrels
see Appendix CR 1.

Notes:
1) Check for safety reasons
4) Headspace on Rim
* Basic dimensions

Reproduction forbidden as well as in the form of extracts without approval of C.I.P.