C.I.P.	369 N.E. Purdey Country of Origin: GB	TAB. II Date 84-06-14 Revision 02-05-15

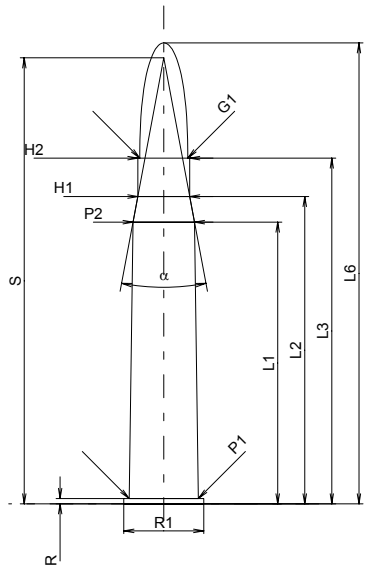

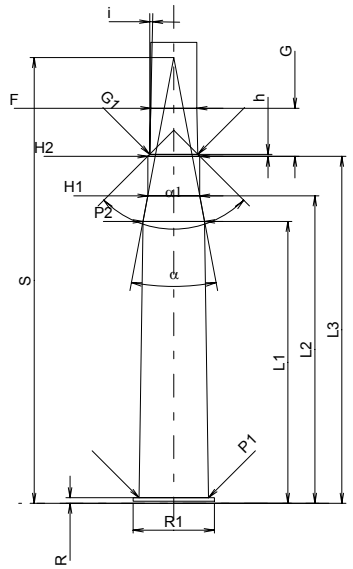

Scale 1:1.5

CARTRIDGE MAXI

Lengths

L1 *	=	55.88	
L2 *	=	60.96	
L3 1)	=	68.58	
L4	=		
L5	=		
L6	=	91.44	

Case Head

R 1)	=	1.07	-0.25
R1	=	15.85	
R3	=		
E	=		
E1	=		
e min	=		
δ	=		
f	=		
β	=		

Powder Chamber

P1	=	13.74
P2 *	=	12.19

Junction Cone

α	=	21°11'05"
S	=	88.47
r1 min	=	
r2	=	

Collar

H1 *	=	10.29
H2 1)	=	10.29

Projectile

G1 1)	=	9.52
G2	=	
F	=	
L3+G 1)	=	78.12

Pressures (Energies)
Method Transducer

Pmax	=	3050	bar
PK	=	3508	bar
PE	=	3810	bar
M	=	25.00	
EE	=	4130	Joule

Miscellaneous Dimensions

Fe 1)	=	0.15
delta L	=	

CHAMBER MINI

Lengths

L1 *	=	55.91
L2 *	=	60.99
L3 1)	=	68.83

Breech

R 1)	=	1.09
R1	=	16.10
R2	=	
R3	=	
r	=	

Powder Chamber

E	=	
P1 1)	=	13.77
P2 *	=	12.22

Junction Cone

α	=	21°17'38"
S	=	88.41
r1 max	=	
r2	=	

Collar

H1 *	=	10.31
H2 1)	=	10.31

Commencement of Rifling

G1 1)*	=	9.55
G 1)*	=	9.54
α1	=	90°
h *	=	0.38
s	=	
i 1)	=	1°15'02"
w	=	

Barrel

F 1)*	=	9.15
Z 1)	=	9.50

Grooves

b	=		
N	=		
u	=	406.00	
Q	=	65.76	mm²

Dimensions in << mm >>
Dimensions and Tolerances for Proof Barrels
see Appendix CR 1.

Notes: 1) Check for safety reasons
* Basic dimensions