C.I.P.	338 Marlin Express Country of Origin: US	TAB. II Date 10-05-26 Revision

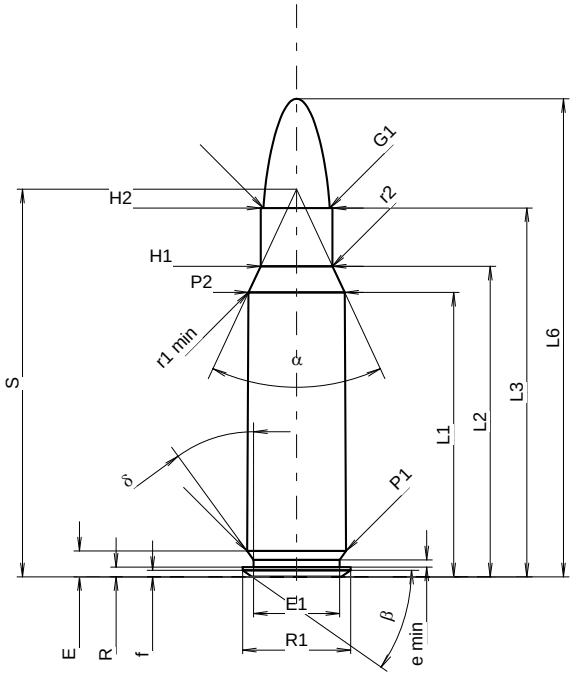

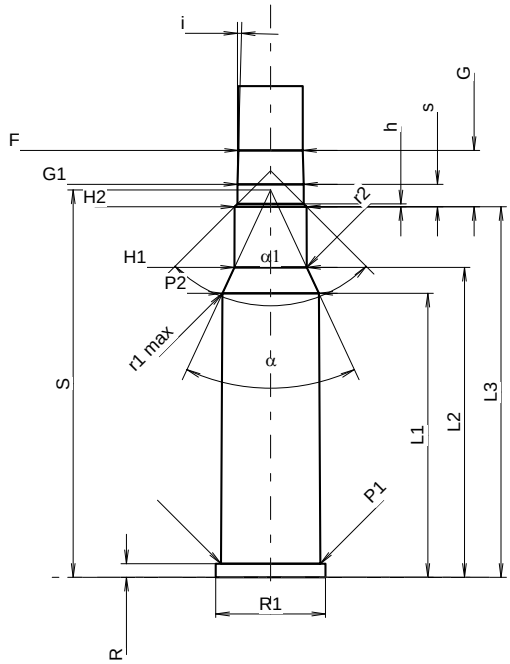

Scale 1.02:1

CARTRIDGE MAXI

Lengths

L1	=	37.03	-0.20
L2	=	40.43	-0.20
L3 *1)*	=	48.01	
L4	=		
L5	=		
L6	=	62.23	

Case Head

R *1)*	=	1.27	
R1	=	14.05	
R3	=		
E	=	3.37	
E1	=	11.20	
e min	=	0.94	
δ	=	36°	
f	=	0.86	
β	=	35°	

Powder Chamber

P1	=	12.89	
P2 *	=	12.52	-0.20

Junction Cone

α *	=	50°
S *	=	50.46
r1 min	=	1.02
r2	=	3.18

Collar

H1 *	=	9.35
H2 *1)*	=	9.35

Projectile

G1 *1)*	=	8.60
G2	=	
F	=	
L3+G *1)*	=	55.34

Pressures (Energies)
Method Transducer

Pmax	=	3200	bar
PK	=	3680	bar
PE	=	4000	bar
M	=	25.00	
EE	=	4200	Joule

Miscellaneous Dimensions

Fe *1)3)*	=	0.15
delta L	=	0.03

CHAMBER MINI

Lengths

L1	=	36.97
L2	=	40.35
L3 *1)*	=	48.24

Breech

R *1)*	=	1.78
R1	=	14.30
R2	=	
R3	=	
r	=	

Powder Chamber

E	=	
P1 *1)*	=	12.93
P2 *	=	12.55

Junction Cone

α *	=	50°
S *	=	50.43
r1 max	=	0.76
r2	=	3.18

Collar

H1 *	=	9.40
H2 *1)*	=	9.37

Commencement of Rifling

G1 *1)**	=	8.61
G *1)*	=	7.33
α1	=	90°
h	=	0.38
s *	=	2.92
i *1)**	=	1°30'
w	=	

Barrel

F *1)**	=	8.38
Z *1)*	=	8.59

Grooves

b	=	2.79	
N	=	6	
u	=	305.00	
Q	=	56.95	mm²

Dimensions in << mm >>
Dimensions and Tolerances for Proof Barrels
see Appendix CR 1.

Notes:
1) Check for safety reasons
3) Headspace on Shoulder
* Basic dimensions