C.I.P.	6 x 52 R BB2 Country of Origin: DE	TAB. II Date 05-05-25 Revision

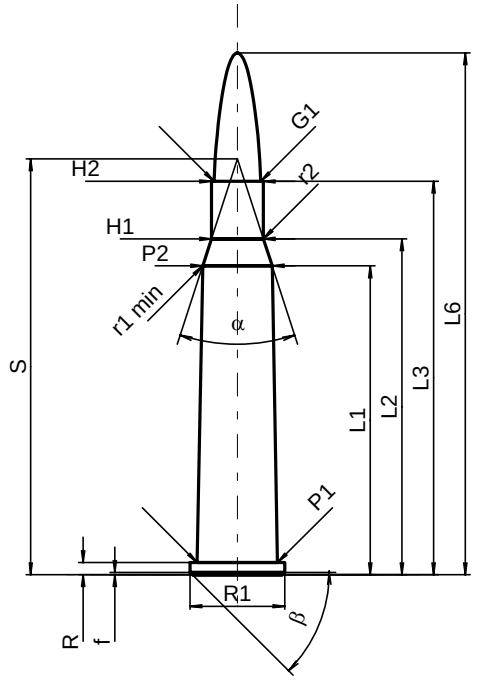

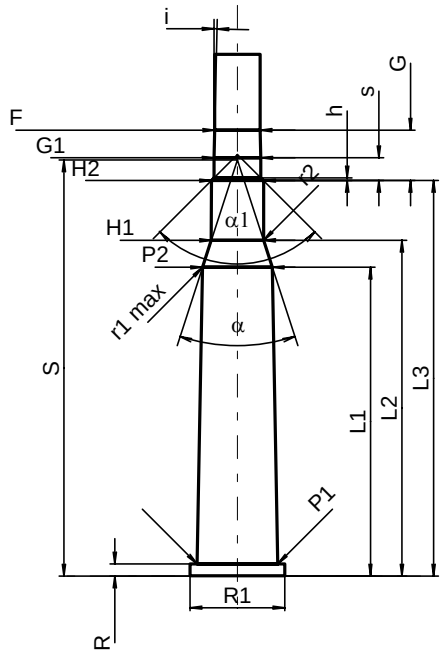

Scale 1:1

CARTRIDGE MAXI

Lengths

L1	=	40.83	
L2	=	44.40	
L3 1)	=	52.00	
L4	=		
L5	=		
L6	=	69.00	

Case Head

R 1)	=	1.60	-0.25
R1	=	12.50	
R3	=		
E	=		
E1	=		
e min	=		
δ	=		
f	=	0.30	
β	=	45°	

Powder Chamber

P1	=	10.62
P2 *	=	9.20

Junction Cone

α *	=	36°
S *	=	54.99
r1 min	=	0.50
r2	=	0.50

Collar

H1 *	=	6.88
H2 1)	=	6.88

Projectile

G1 1)*	=	6.17
G2	=	
F	=	
L3+G 1)	=	58.67

Pressures (Energies)
Method Transducer

Pmax	=	3300	bar
PK	=	3795	bar
PE	=	4125	bar
M	=	25.00	
EE	=	2200	Joule

Miscellaneous Dimensions

Fe 1)	=	0.15
delta L	=	

CHAMBER MINI

Lengths

L1	=	40.82
L2	=	44.39
L3 1)	=	52.30

Breech

R 1)	=	1.60
R1	=	12.55
R2	=	
R3	=	
r	=	

Powder Chamber

E	=	
P1 1)	=	10.65
P2 *	=	9.23

Junction Cone

α *	=	36°
S *	=	55.02
r1 max	=	0.50
r2	=	0.50

Collar

H1 *	=	6.91
H2 1)	=	6.90

Commencement of Rifling

G1 1)*	=	6.19
G 1)	=	6.67
α1	=	90°
h	=	0.36
s *	=	3.00
i 1)*	=	1°19'36"
w	=	

Barrel

F 1)*	=	6.02
Z 1)	=	6.17

Grooves

b	=	1.73	
N	=	6	
u	=	254.00	
Q	=	29.25	mm²

Dimensions in << mm >>
Dimensions and Tolerances for Proof Barrels
see Appendix CR 1.

Notes: 1) Check for safety reasons
* Basic dimensions