C.I.P.	6 x 50 R Scheiring Country of Origin: AT	TAB. II Date 87-09-29 Revision 02-05-15

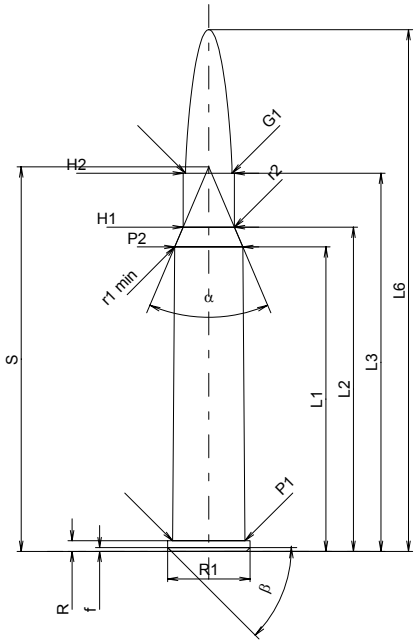

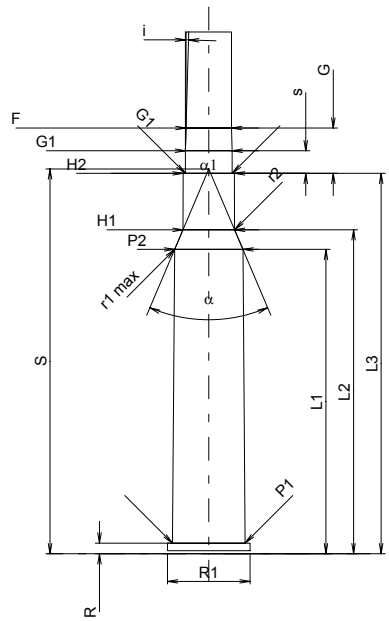

Scale 1:1

CARTRIDGE MAXI

Lengths

L1 *	=	40.26	
L2 *	=	42.87	
L3 1)	=	50.00	
L4	=		
L5	=		
L6	=	69.00	

Case Head

R 1)	=	1.40	-0.15
R1	=	10.90	
R3	=		
E	=		
E1	=		
e min	=		
δ	=		
f	=	0.50	
β	=	45°	

Powder Chamber

P1	=	9.59
P2 *	=	9.00

Junction Cone

α	=	46°04'44"
S	=	50.84
r1 min	=	0.50
r2	=	0.50

Collar

H1 *	=	6.78
H2 1)	=	6.75

Projectile

G1 1)	=	6.17
G2	=	
F	=	
L3+G 1)	=	56.00

Pressures (Energies)
Method Transducer

Pmax	=	4400	bar
PK	=	5060	bar
PE	=	5500	bar
M	=	25.00	
EE	=	2100	Joule

Miscellaneous Dimensions

Fe 1)	=	0.10
delta L	=	

CHAMBER MINI

Lengths

L1 *	=	40.26
L2 *	=	42.85
L3 1)	=	50.30

Breech

R 1)	=	1.40
R1	=	10.93
R2	=	
R3	=	
r	=	

Powder Chamber

E	=	
P1 1)	=	9.62
P2 *	=	9.03

Junction Cone

α	=	46°01'22"
S	=	50.89
r1 max	=	0.50
r2	=	0.50

Collar

H1 *	=	6.83
H2 1)	=	6.80

Commencement of Rifling

G1 1)*	=	6.19
G 1)*	=	6.00
α1	=	180°
h	=	
s *	=	3.00
i 1)	=	1°37'22"
w	=	

Barrel

F 1)*	=	6.02
Z 1)	=	6.17

Grooves

b	=	1.73	
N	=	6	
u	=	254.00	
Q	=	29.25	mm²

Dimensions in << mm >>
Dimensions and Tolerances for Proof Barrels
see Appendix CR 1.

Notes: 1) Check for safety reasons
* Basic dimensions