C.I.P.	5,6 x 70 R Country of Origin: DE	TAB. II Date 08-04-15 Revision

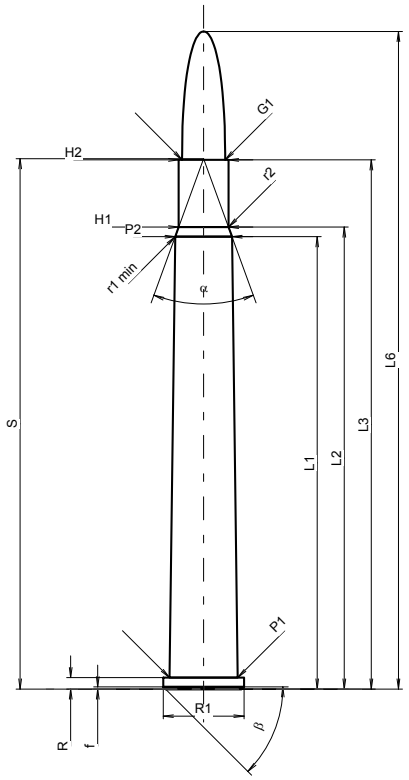

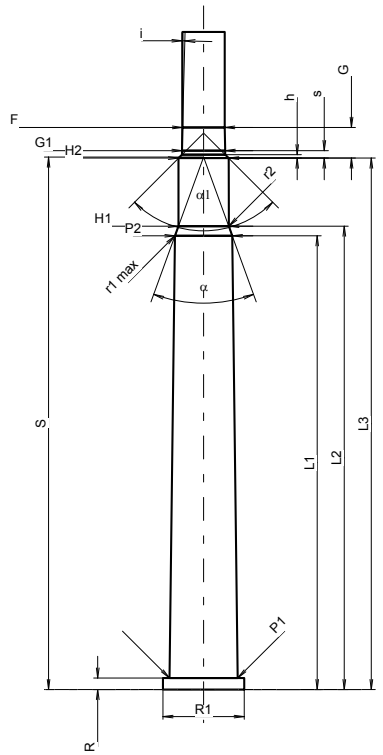

Scale 1:1

CARTRIDGE MAXI

Lengths

L1	=	59.84	
L2	=	61.12	
L3 *1)*	=	70.00	
L4	=		
L5	=		
L6	=	87.00	

Case Head

R *1)*	=	1.52	-0.25
R1	=	10.70	
R3	=		
E	=		
E1	=		
e min	=		
δ	=		
f	=	0.30	
β	=	45°	

Powder Chamber

P1	=	9.03
P2 *	=	7.52

Junction Cone

α *	=	40°
S *	=	70.17
r1 min	=	0.50
r2	=	0.50

Collar

H1 *	=	6.59
H2 *1)*	=	6.59

Projectile

G1 *1)*	=	5.70
G2	=	
F	=	
L3+G *1)*	=	74.06

Pressures (Energies)
Method Transducer

Pmax	=	2600	bar
PK	=	2990	bar
PE	=	3250	bar
M	=	25.00	
EE	=	1785	Joule

Miscellaneous Dimensions

Fe *1)4)*	=	0.15
delta L	=	

CHAMBER MINI

Lengths

L1	=	60.03
L2	=	61.29
L3 *1)*	=	70.30

Breech

R *1)*	=	1.52
R1	=	10.75
R2	=	
R3	=	
r	=	

Powder Chamber

E	=	
P1 *1)*	=	9.03
P2 *	=	7.57

Junction Cone

α *	=	40°
S *	=	70.43
r1 max	=	0.50
r2	=	0.50

Collar

H1 *	=	6.65
H2 *1)*	=	6.62

Commencement of Rifling

G1 *1)**	=	5.72
G *1)*	=	4.06
α1 *	=	90°
h	=	0.45
s	=	1.00
i *1)**	=	1°30'
w	=	

Barrel

F *1)**	=	5.56
Z *1)*	=	5.69

Grooves

b	=	2.00	
N	=	6	
u	=	290.00	
Q	=	25.08	mm²

Dimensions in << mm >>
Dimensions and Tolerances for Proof Barrels
see Appendix CR 1.

Notes:
1) Check for safety reasons
4) Headspace on Rim
* Basic dimensions