C.I.P.	22 Savage Country of Origin: US	TAB. II Date 84-06-14 Revision 02-05-15

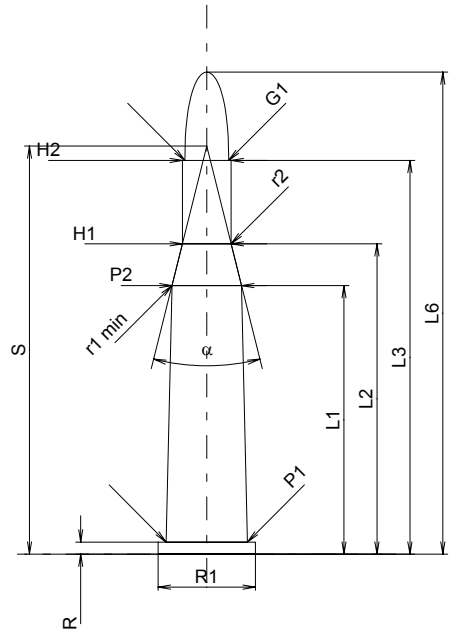

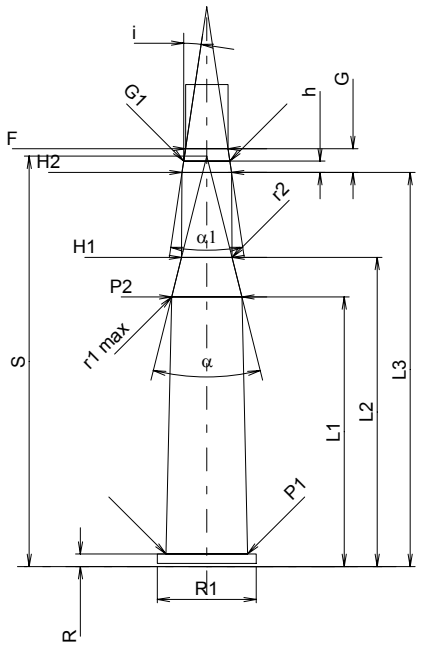

Scale 1:1

CARTRIDGE MAXI

Lengths

L1	=	35.52	
L2	=	41.04	
L3 1)	=	52.07	
L4	=		
L5	=		
L6	=	63.75	

Case Head

R 1)	=	1.60	-0.25
R1	=	12.85	
R3	=		
E	=		
E1	=		
e min	=		
δ	=		
f	=		
β	=		

Powder Chamber

P1	=	10.74
P2 *	=	9.20

Junction Cone

α *	=	28°
S *	=	53.97
r1 min	=	3.81
r2	=	3.81

Collar

H1 *	=	6.45
H2 1)	=	6.45

Projectile

G1 1)	=	5.79
G2	=	
F	=	
L3+G 1)	=	55.22

Pressures (Energies)
Method Transducer

Pmax	=	3300	bar
PK	=	3795	bar
PE	=	4125	bar
M	=	25.00	
EE	=	1990	Joule

Miscellaneous Dimensions

Fe 1)	=	0.15
delta L	=	

CHAMBER MINI

Lengths

L1	=	35.66
L2	=	40.89
L3 1)	=	52.12

Breech

R 1)	=	1.65
R1	=	13.08
R2	=	
R3	=	
r	=	

Powder Chamber

E	=	
P1 1)	=	10.80
P2 *	=	9.28

Junction Cone

α *	=	28°
S *	=	54.27
r1 max	=	3.81
r2	=	7.62

Collar

H1 *	=	6.67
H2 1)	=	6.55

Commencement of Rifling

G1 1)*	=	6.10
G 1)	=	3.15
α1 *	=	17°
h	=	1.51
s	=	
i 1)*	=	8°30'
w	=	

Barrel

F 1)*	=	5.61
Z 1)	=	5.74

Grooves

b	=	1.65	
N	=	6	
u	=	305.00	
Q	=	25.37	mm²

Dimensions in << mm >>
Dimensions and Tolerances for Proof Barrels
see Appendix CR 1.

Notes: 1) Check for safety reasons
* Basic dimensions