C.I.P.	11,15 x 60 R Country of Origin: DE	TAB. II Date 84-06-14 Revision 02-05-15

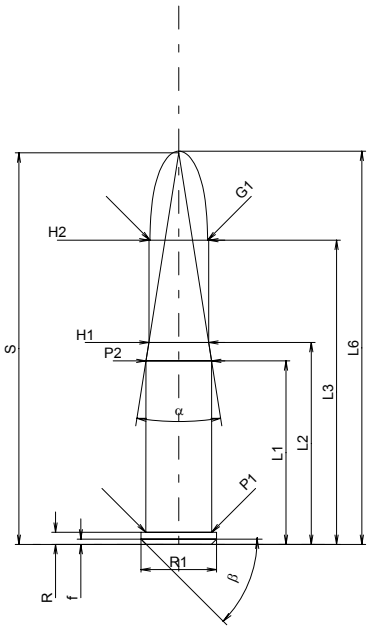

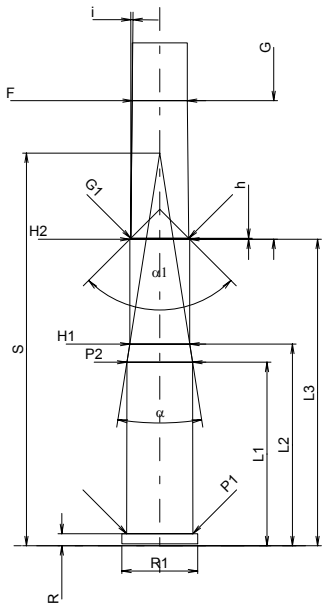

Scale 1:1.5

CARTRIDGE MAXI

Lengths

L1 *	=	36.40	
L2 *	=	40.05	
L3 1)	=	60.35	
L4	=		
L5	=		
L6	=	78.00	

Case Head

R 1)	=	2.40	-0.25
R1	=	15.00	
R3	=		
E	=		
E1	=		
e min	=		
δ	=		
f	=	1.05	
β	=	45°	

Powder Chamber

P1	=	13.10
P2 *	=	13.00

Junction Cone

α	=	17°54'18"
S	=	77.66
r1 min	=	
r2	=	

Collar

H1 *	=	11.85
H2 1)	=	11.85

Projectile

G1 1)	=	11.40
G2	=	
F	=	
L3+G 1)	=	87.85

Pressures (Energies)
Method Transducer

Pmax	=	2800	bar
PK	=	3220	bar
PE	=	3500	bar
M	=	25.00	
EE	=	2730	Joule

Miscellaneous Dimensions

Fe 1)	=	0.15
delta L	=	

CHAMBER MINI

Lengths

L1 *	=	36.40
L2 *	=	40.00
L3 1)	=	60.80

Breech

R 1)	=	2.40
R1	=	15.05
R2	=	
R3	=	
r	=	

Powder Chamber

E	=	
P1 1)	=	13.13
P2 *	=	13.03

Junction Cone

α	=	17°50'20"
S	=	77.91
r1 max	=	
r2	=	

Collar

H1 *	=	11.90
H2 1)	=	11.88

Commencement of Rifling

G1 1)*	=	11.50	
G 1)*	=	27.50	
α1	=	90°	
h *	=	0.19	
s	=		
i 1)	=	0°34'36"	
w	=		

Barrel

F 1)*	=	10.95
Z 1)	=	11.50

Grooves

b	=	5.60	
N	=	4	
u	=	550.00	
Q	=	100.62	mm²

Dimensions in << mm >>
Dimensions and Tolerances for Proof Barrels
see Appendix CR 1.

Notes: 1) Check for safety reasons
* Basic dimensions