C.I.P.	10,3 x 60 R Country of Origin: CH	TAB. II Date 84-06-14 Revision 02-05-15

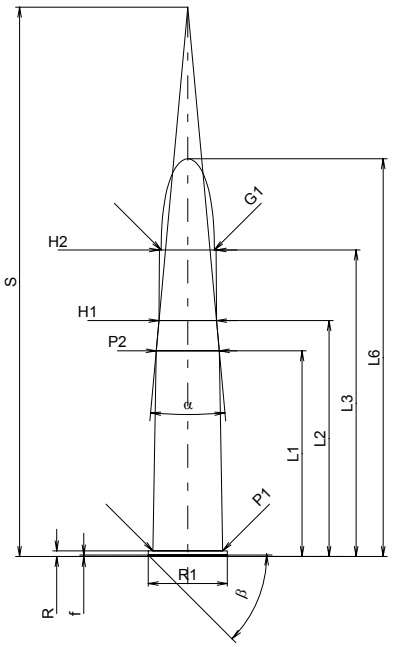

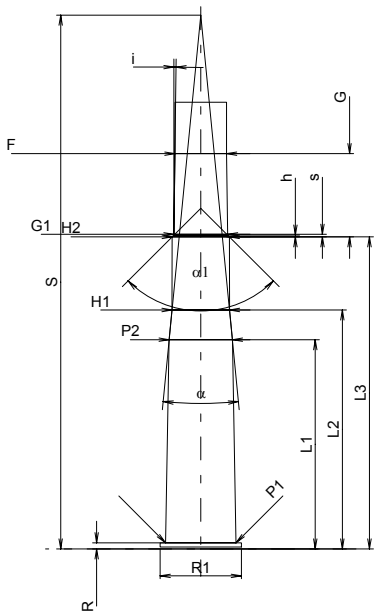

Scale 1:1.5

CARTRIDGE MAXI

Lengths

L1	=	40.80	
L2	=	46.80	
L3 1)	=	60.80	
L4	=		
L5	=		
L6	=	78.90	

Case Head

R 1)	=	1.10	-0.25
R1	=	15.70	
R3	=		
E	=		
E1	=		
e min	=		
δ	=		
f	=	0.30	
β	=	45°	

Powder Chamber

P1	=	13.85
P2 *	=	12.50

Junction Cone

α *	=	10°28'30"
S *	=	108.98
r1 min	=	
r2	=	

Collar

H1 *	=	11.40
H2 1)	=	11.26

Projectile

G1 1)	=	10.54
G2	=	
F	=	
L3+G 1)	=	77.30

Pressures (Energies)
Method Transducer

Pmax	=	2700	bar
PK	=	3105	bar
PE	=	3375	bar
M	=	25.00	
EE	=	4620	Joule

Miscellaneous Dimensions

Fe 1)	=	0.15
delta L	=	

CHAMBER MINI

Lengths

L1	=	41.50
L2	=	47.40
L3 1)	=	61.90

Breech

R 1)	=	1.20
R1	=	16.10
R2	=	
R3	=	
r	=	

Powder Chamber

E	=	
P1 1)	=	13.95
P2 *	=	12.55

Junction Cone

α *	=	11°07'58"
S *	=	105.88
r1 max	=	
r2	=	

Collar

H1 *	=	11.40
H2 1)	=	11.35

Commencement of Rifling

G1 1)*	=	10.65
G 1)	=	16.50
α1 *	=	90°
h	=	0.35
s	=	0.50
i 1)*	=	0°42'58"
w	=	

Barrel

F 1)*	=	10.25
Z 1)	=	10.49

Grooves

b	=	3.60	
N	=	6	
u	=	450.00	
Q	=	85.16	mm²

Dimensions in << mm >>
Dimensions and Tolerances for Proof Barrels
see Appendix CR 1.

Notes: 1) Check for safety reasons
* Basic dimensions