C.I.P.	9 x 53 R Country of Origin: RU	TAB. II Date 99-03-23 Revision 07-05-14

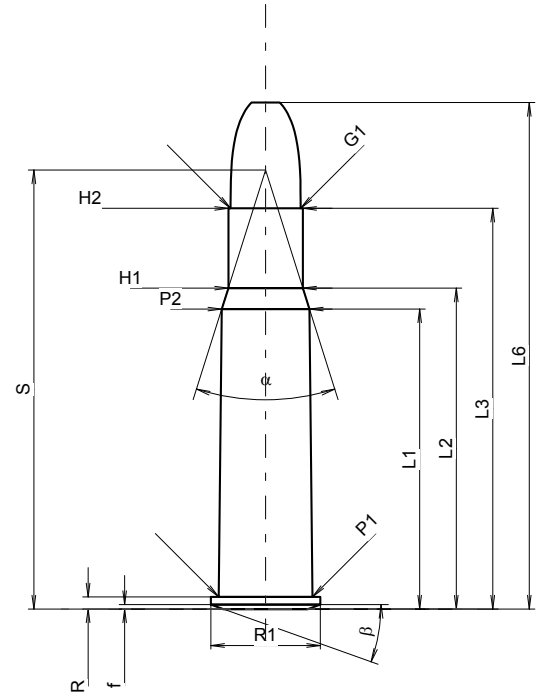

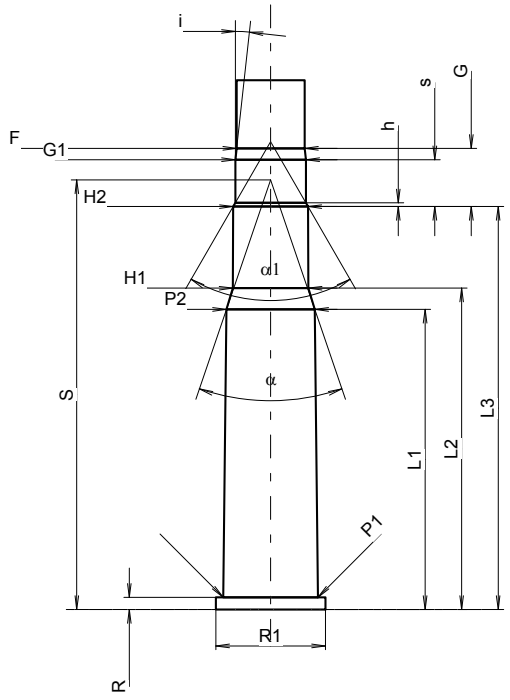

Scale 1:1

CARTRIDGE MAXI

Lengths

L1 *	=	39.68	
L2 *	=	42.45	
L3 1)	=	53.00	
L4	=		
L5	=		
L6	=	67.00	

Case Head

R	=	1.60	
R1	=	14.48	-0.25
R3	=		
E	=		
E1	=		
e min	=		
δ	=		
f	=	0.58	
β	=	19°40'	

Powder Chamber

P1	=	12.42
P2 *	=	11.61

Junction Cone

α	=	35°03'40"
S	=	58.06
r1 min	=	
r2	=	

Collar

H1 *	=	9.86
H2 1)	=	9.86

Projectile

G1 1)	=	9.27
G2	=	
F	=	
L3+G 1)	=	60.70

Pressures (Energies)
Method Transducer

Pmax	=	3400	bar
PK	=	3910	bar
PE	=	4420	bar
M	=	25.00	
EE	=	3800	Joule

Miscellaneous Dimensions

Fe 1)4)	=	0.15
delta L	=	

CHAMBER MINI

Lengths

L1 *	=	39.70
L2 *	=	42.50
L3 1)	=	53.30

Breech

R 1)	=	1.60
R1	=	14.50
R2	=	
R3	=	
r	=	

Powder Chamber

E	=	
P1 1)	=	12.51
P2 *	=	11.68

Junction Cone

α 1)	=	33°57'38"
S	=	56.83
r1 max	=	
r2	=	

Collar

H1 *	=	9.97
H2 1)	=	9.90

Commencement of Rifling

G1 1)*	=	9.33
G 1)*	=	7.70
α1	=	60°
h *	=	0.49
s *	=	6.20
i 1)	=	6°16'38"
w	=	

Barrel

F 1)*	=	9.00
Z 1)	=	9.25

Grooves

b	=	3.00	
N	=	6	
u	=	240.00	
Q	=	65.91	mm²

Dimensions in << mm >>
Dimensions and Tolerances for Proof Barrels
see Appendix CR 1.

Notes:
1) Check for safety reasons
4) Headspace on Rim
* Basic dimensions