C.I.P.	8 mm - 348 Win.	TAB.	II
		Date	99-03-16
	Country of Origin: FR	Revision	02-05-15

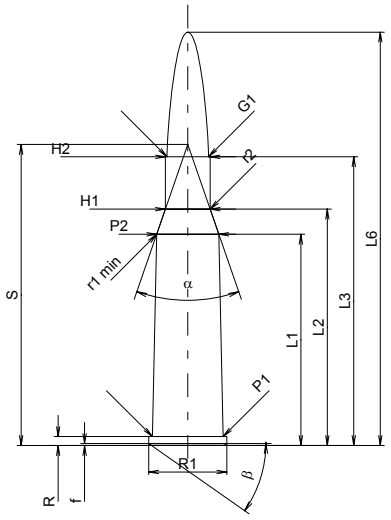

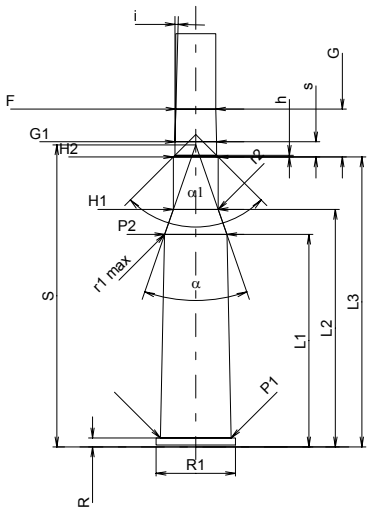

Scale 1:1.5

CARTRIDGE MAXI

Lengths

L1 *	=	41.91	
L2 *	=	46.88	
L3 1)	=	57.28	
L4	=		
L5	=		
L6	=	82.00	

Case Head

R 1)	=	1.78	-0.25
R1	=	15.49	
R3	=		
E	=		
E1	=		
e min	=		
δ	=		
f	=	0.38	
β	=	35°	

Powder Chamber

P1	=	14.05
P2 *	=	12.32

Junction Cone

α	=	38°10'45"
S	=	59.71
r1 min	=	0.76
r2	=	2.54

Collar

H1 *	=	8.88
H2 1)	=	8.85

Projectile

G1 1)	=	8.22
G2	=	
F	=	
L3+G 1)	=	66.77

Pressures (Energies)
Method Transducer

Pmax	=	3000	bar
PK	=	3450	bar
PE	=	3750	bar
M	=	25.00	
EE	=	2600	Joule

Miscellaneous Dimensions

Fe 1)	=	0.15
delta L	=	

CHAMBER MINI

Lengths

L1 *	=	42.17
L2 *	=	47.12
L3 1)	=	57.53

Breech

R 1)	=	1.78
R1	=	15.75
R2	=	
R3	=	
r	=	

Powder Chamber

E	=	
P1 1)	=	14.07
P2 *	=	12.34

Junction Cone

α	=	38°19'19"
S	=	59.93
r1 max	=	0.76
r2	=	2.54

Collar

H1 *	=	8.90
H2 1)	=	8.87

Commencement of Rifling

G1 1)*	=	8.23	
G 1)*	=	9.49	
α1	=	90°	
h	=	0.32	
s *	=	3.00	
i 1)	=	1°30'02"	
w	=		

Barrel

F 1)*	=	7.89
Z 1)	=	8.20

Grooves

b	=	4.05	
N	=	4	
u	=	240.00	
Q	=	51.52	mm²

Dimensions in << mm >>
Dimensions and Tolerances for Proof Barrels
see Appendix CR 1.

Notes: 1) Check for safety reasons
* Basic dimensions