C.I.P.	8 x 50 R Country of Origin: AT	TAB. II Date 89-10-06 Revision 02-05-15

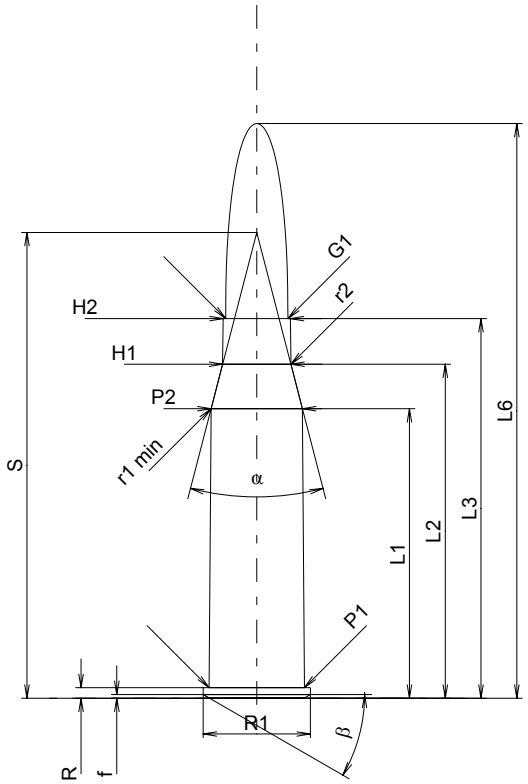

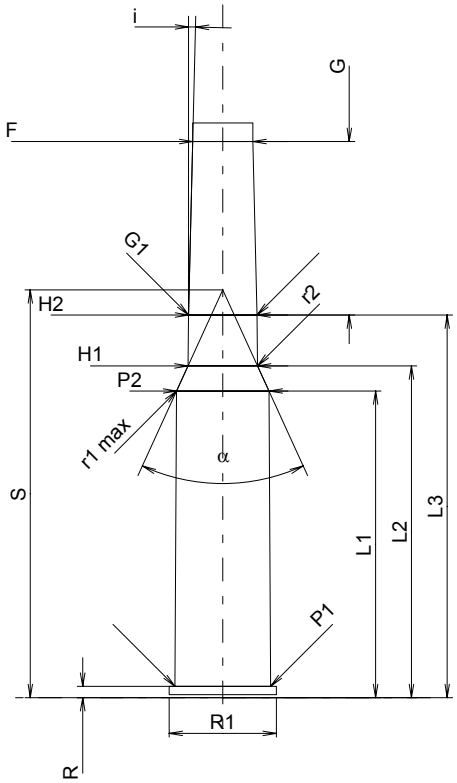

Scale 1:1

CARTRIDGE MAXI

Lengths

L1 *	=	38.29	
L2 *	=	44.17	
L3 1)	=	50.20	
L4	=		
L5	=		
L6	=	76.00	

Case Head

R 1)	=	1.40	-0.25
R1	=	14.20	
R3	=		
E	=		
E1	=		
e min	=		
δ	=		
f	=	0.50	
β	=	30°	

Powder Chamber

P1	=	12.60
P2 *	=	12.09

Junction Cone

α	=	29°04'45"
S	=	61.60
r1 min	=	10.00
r2	=	2.00

Collar

H1 *	=	9.04
H2 1)	=	8.90

Projectile

G1 1)	=	8.22
G2	=	
F	=	
L3+G 1)	=	73.15

Pressures (Energies)
Method Transducer

Pmax	=	3550	bar
PK	=	4083	bar
PE	=	4440	bar
M	=	25.00	
EE	=	3000	Joule

Miscellaneous Dimensions

Fe 1)	=	0.15
delta L	=	

CHAMBER MINI

Lengths

L1 *	=	40.55
L2 *	=	43.87
L3 1)	=	50.60

Breech

R 1)	=	1.50
R1	=	14.20
R2	=	
R3	=	
r	=	

Powder Chamber

E	=	
P1 1)	=	12.64
P2 *	=	12.22

Junction Cone

α	=	49°03'25"
S	=	53.94
r1 max	=	10.04
r2	=	2.00

Collar

H1 *	=	9.19
H2 1)	=	9.04

Commencement of Rifling

G1 1)*	=	9.04
G 1)*	=	22.95
α1	=	180°
h	=	
s	=	
i 1)	=	1°21'37"
w	=	

Barrel

F 1)*	=	7.95
Z 1)	=	8.35

Grooves

b	=	3.50	
N	=	4	
u	=	250.00	
Q	=	52.53	mm²

Dimensions in << mm >>
Dimensions and Tolerances for Proof Barrels
see Appendix CR 1.

Notes: 1) Check for safety reasons
* Basic dimensions