C.I.P.	5,6 x 52 R Country of Origin: DE	TAB. II Date 84-06-14 Revision 02-05-15

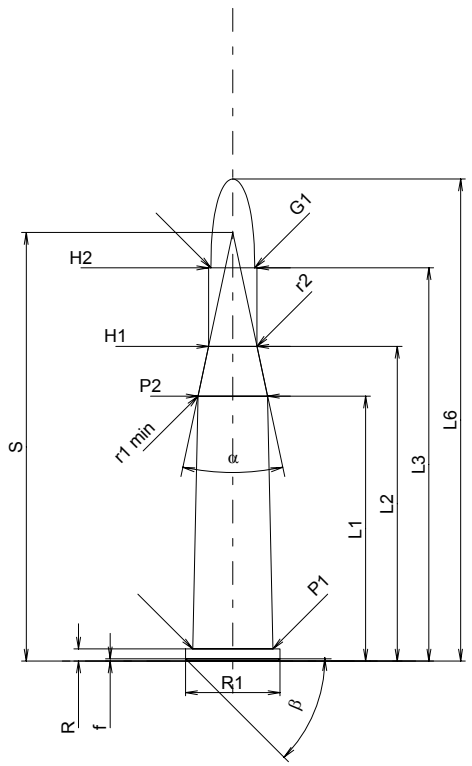

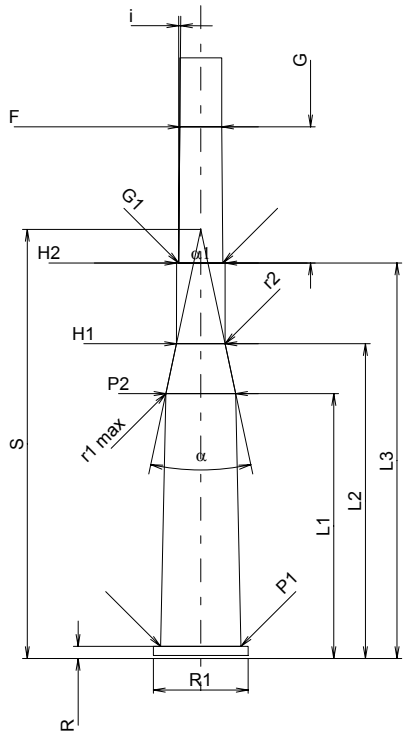

Scale 1:1

CARTRIDGE MAXI

Lengths

L1 *	=	35.03	
L2 *	=	41.62	
L3 1)	=	52.00	
L4	=		
L5	=		
L6	=	63.75	

Case Head

R 1)	=	1.60	-0.25
R1	=	12.50	
R3	=		
E	=		
E1	=		
e min	=		
δ	=		
f	=	0.30	
β	=	45°	

Powder Chamber

P1	=	10.62
P2 *	=	9.20

Junction Cone

α	=	23°59'16"
S	=	56.68
r1 min	=	0.50
r2	=	0.50

Collar

H1 *	=	6.40
H2 1)	=	6.40

Projectile

G1 1)	=	5.79
G2	=	
F	=	
L3+G 1)	=	70.00

Pressures (Energies)
Method Transducer

Pmax	=	3300	bar
PK	=	3795	bar
PE	=	4125	bar
M	=	25.00	
EE	=	1830	Joule

Miscellaneous Dimensions

Fe 1)	=	0.15
delta L	=	

CHAMBER MINI

Lengths

L1 *	=	35.03
L2 *	=	41.62
L3 1)	=	52.30

Breech

R 1)	=	1.60
R1	=	12.55
R2	=	
R3	=	
r	=	

Powder Chamber

E	=	
P1 1)	=	10.65
P2 *	=	9.23

Junction Cone

α	=	24°
S	=	56.74
r1 max	=	3.80
r2	=	7.60

Collar

H1 *	=	6.43
H2 1)	=	6.42

Commencement of Rifling

G1 1)*	=	5.85
G 1)*	=	18.00
α1	=	180°
h	=	
s	=	
i 1)	=	0°28'39"
w	=	

Barrel

F 1)*	=	5.55
Z 1)	=	5.75

Grooves

b	=	2.00	
N	=	6	
u	=	270.00	
Q	=	25.42	mm²

Dimensions in << mm >>
Dimensions and Tolerances for Proof Barrels
see Appendix CR 1.

Notes: 1) Check for safety reasons
* Basic dimensions