C.I.P.	6,5 x 57 R Country of Origin: DE	TAB. II Date 84-06-14 Revision 02-05-15

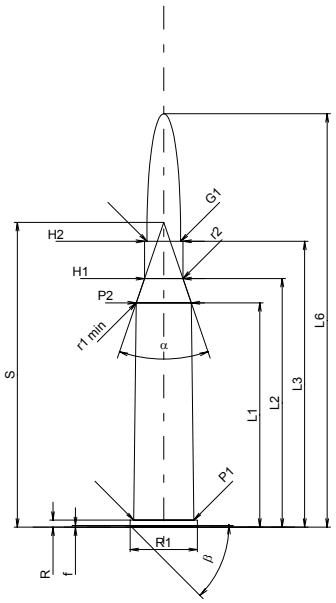

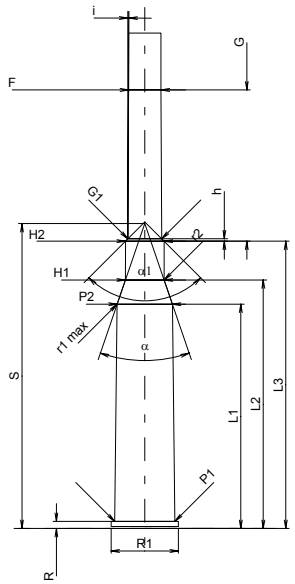

Scale 1:1.5

CARTRIDGE MAXI

Lengths

L1 *	=	44.50	
L2 *	=	49.30	
L3 1)	=	56.70	
L4	=		
L5	=		
L6	=	82.00	

Case Head

R 1)	=	1.40	-0.25
R1	=	13.32	
R3	=		
E	=		
E1	=		
e min	=		
δ	=		
f	=	0.30	
β	=	45°	

Powder Chamber

P1	=	11.92
P2 *	=	10.94

Junction Cone

α	=	37°50'02"
S	=	60.46
r1 min	=	0.50
r2	=	0.50

Collar

H1 *	=	7.65
H2 1)	=	7.65

Projectile

G1 1)	=	6.70
G2	=	
F	=	
L3+G 1)	=	86.70

Pressures (Energies)
Method Transducer

Pmax	=	3300	bar
PK	=	3795	bar
PE	=	4125	bar
M	=	25.00	
EE	=	3055	Joule

Miscellaneous Dimensions

Fe 1)	=	0.15
delta L	=	

CHAMBER MINI

Lengths

L1 *	=	44.50
L2 *	=	49.30
L3 1)	=	57.00

Breech

R 1)	=	1.40
R1	=	13.37
R2	=	
R3	=	
r	=	

Powder Chamber

E	=	
P1 1)	=	11.95
P2 *	=	10.97

Junction Cone

α	=	37°50'02"
S	=	60.50
r1 max	=	0.50
r2	=	0.50

Collar

H1 *	=	7.68
H2 1)	=	7.67

Commencement of Rifling

G1 1)*	=	6.75
G 1)*	=	30.00
α1	=	90°
h *	=	0.46
s	=	
i 1)	=	0°17'11"
w	=	

Barrel

F 1)*	=	6.45
Z 1)	=	6.70

Grooves

b	=	3.50	
N	=	4	
u	=	200.00	
Q	=	34.52	mm²

Dimensions in << mm >>
Dimensions and Tolerances for Proof Barrels
see Appendix CR 1.

Notes: 1) Check for safety reasons
* Basic dimensions