C.I.P.	475 N°2 N.E. 3"1/2 Jeffery Country of Origin: GB	TAB. II Date 98-01-27 Revision 02-05-15

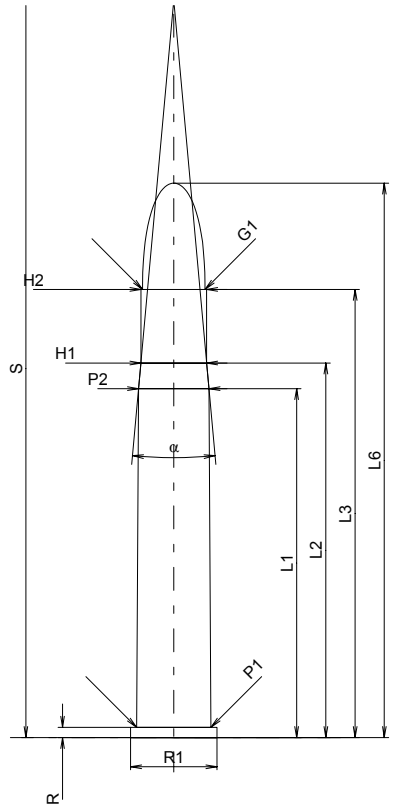

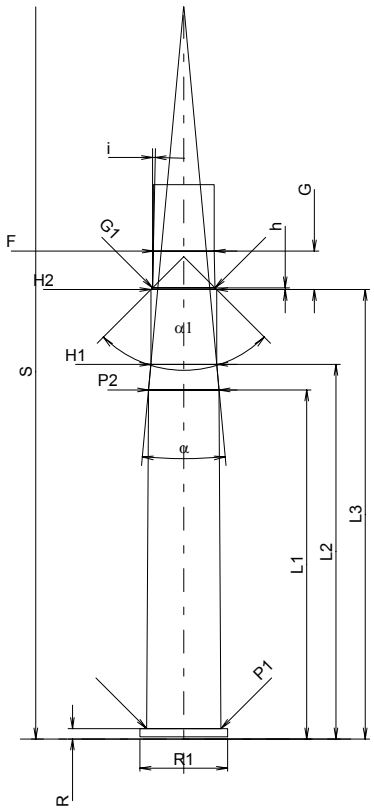

Scale 1:1.5

CARTRIDGE MAXI

Lengths

L1 *	=	69.21	
L2 *	=	74.29	
L3 1)	=	88.90	
L4	=		
L5	=		
L6	=	109.98	

Case Head

R 1)	=	2.03	-0.25
R1	=	17.14	
R3	=		
E	=		
E1	=		
e min	=		
δ	=		
f	=		
β	=		

Powder Chamber

P1	=	14.73
P2 *	=	13.97

Junction Cone

α	=	10°20'53"
S	=	146.35
r1 min	=	
r2	=	

Collar

H1 *	=	13.05
H2 1)	=	13.05

Projectile

G1 1)	=	12.39
G2	=	
F	=	
L3+G 1)	=	96.54

Pressures (Energies)
Method Transducer

Pmax	=	2750	bar
PK	=	3163	bar
PE	=	3440	bar
M	=	25.00	
EE	=	6957	Joule

Miscellaneous Dimensions

Fe 1)	=	0.15
delta L	=	

CHAMBER MINI

Lengths

L1 *	=	69.24
L2 *	=	74.32
L3 1)	=	89.15

Breech

R 1)	=	2.06
R1	=	17.40
R2	=	
R3	=	
r	=	

Powder Chamber

E	=	
P1 1)	=	14.76
P2 *	=	14.00

Junction Cone

α	=	10°27'36"
S	=	145.71
r1 max	=	
r2	=	

Collar

H1 *	=	13.07
H2 1)	=	13.07

Commencement of Rifling

G1 1)*	=	12.42
G 1)*	=	7.64
α1	=	90°
h *	=	0.33
s	=	
i 1)	=	1°12'53"
w	=	

Barrel

F 1)*	=	12.11
Z 1)	=	12.42

Grooves

b	=	2.67	
N	=	7	
u	=	457.00	
Q	=	118.10	mm²

Dimensions in << mm >>
Dimensions and Tolerances for Proof Barrels
see Appendix CR 1.

Notes: 1) Check for safety reasons
* Basic dimensions