C.I.P.	6,5 x 50 R Country of Origin: DE	TAB. II Date 92-02-27 Revision 02-05-15

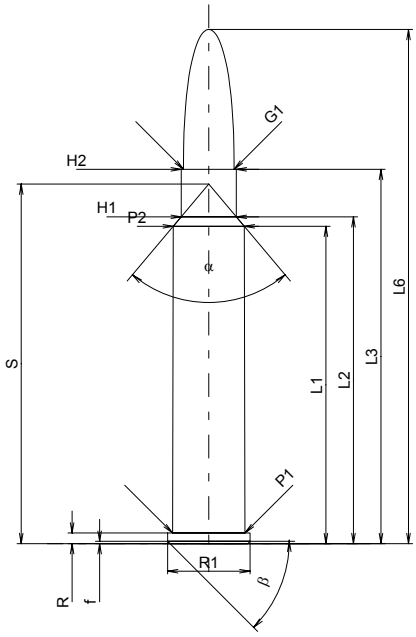

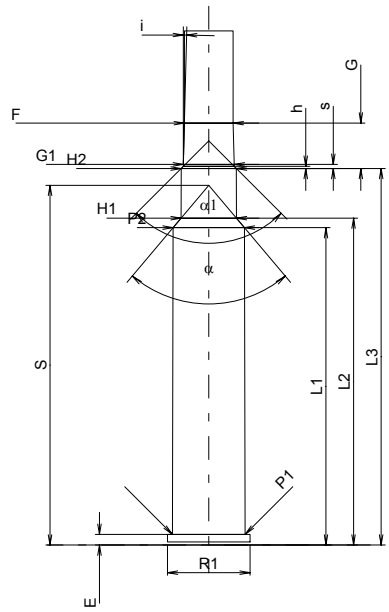

Scale 1:1

CARTRIDGE MAXI

Lengths

L1 *	=	41.97	
L2 *	=	43.23	
L3 1)	=	49.50	
L4	=		
L5	=		
L6	=	68.00	

Case Head

R 1)	=	1.40	-0.25
R1	=	10.90	
R3	=		
E	=		
E1	=		
e min	=		
δ	=		
f	=	0.30	
β	=	45°	

Powder Chamber

P1	=	9.59
P2 *	=	9.40

Junction Cone

α	=	80°08'44"
S	=	47.56
r1 min	=	
r2	=	

Collar

H1 *	=	7.28
H2 1)	=	7.27

Projectile

G1 1)	=	6.70
G2	=	
F	=	
L3+G 1)	=	55.50

Pressures (Energies)
Method Transducer

Pmax	=	3650	bar
PK	=	4198	bar
PE	=	4563	bar
M	=	25.00	
EE	=	2500	Joule

Miscellaneous Dimensions

Fe 1)	=	0.15
delta L	=	

CHAMBER MINI

Lengths

L1 *	=	41.98
L2 *	=	43.24
L3 1)	=	49.80

Breech

R 1)	=	1.40
R1	=	10.93
R2	=	
R3	=	
r	=	

Powder Chamber

E	=	1.40
P1 1)	=	9.62
P2 *	=	9.43

Junction Cone

α	=	80°08'45"
S	=	47.58
r1 max	=	
r2	=	

Collar

H1 *	=	7.31
H2 1)	=	7.30

Commencement of Rifling

G1 1)*	=	6.72
G 1)*	=	6.00
α1	=	90°
h	=	0.29
s *	=	0.55
i 1)	=	1°25'08"
w	=	

Barrel

F 1)*	=	6.45
Z 1)	=	6.70

Grooves

b	=	3.60	
N	=	4	
u	=	228.00	
Q	=	34.58	mm²

Dimensions in << mm >>
Dimensions and Tolerances for Proof Barrels
see Appendix CR 1.

Notes: 1) Check for safety reasons
* Basic dimensions