C.I.P.	450/400 Mag. N.E. 3"1/4 Country of Origin: GB	TAB. II Date 84-06-14 Revision 02-05-15

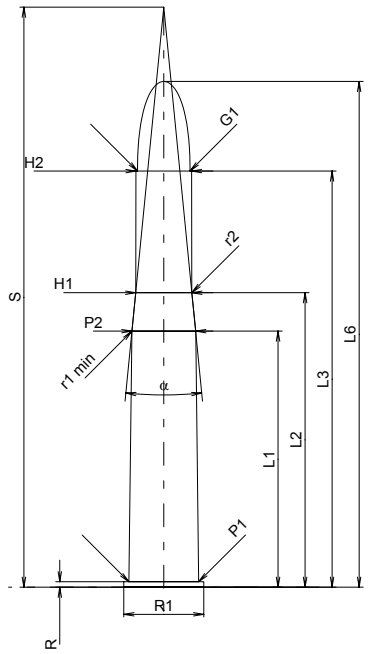

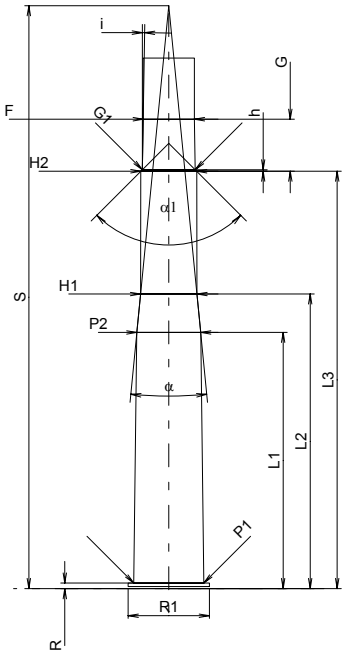

Scale 1:1.5

CARTRIDGE MAXI

Lengths

L1 *	=	50.80	
L2 *	=	58.42	
L3 1)	=	82.55	
L4	=		
L5	=		
L6	=	100.33	

Case Head

R 1)	=	1.07	-0.25
R1	=	15.85	
R3	=		
E	=		
E1	=		
e min	=		
δ	=		
f	=		
β	=		

Powder Chamber

P1	=	13.84
P2 *	=	12.65

Junction Cone

α	=	11°14'33"
S	=	115.06
r1 min	=	19.56
r2	=	19.56

Collar

H1 *	=	11.15
H2 1)	=	11.05

Projectile

G1 1)	=	10.41
G2	=	
F	=	
L3+G 1)	=	92.87

Pressures (Energies)
Method Transducer

Pmax	=	2950	bar
PK	=	3393	bar
PE	=	3690	bar
M	=	25.00	
EE	=	6993	Joule

Miscellaneous Dimensions

Fe 1)	=	0.15
delta L	=	

CHAMBER MINI

Lengths

L1 *	=	50.83
L2 *	=	58.45
L3 1)	=	82.80

Breech

R 1)	=	1.09
R1	=	16.10
R2	=	
R3	=	
r	=	

Powder Chamber

E	=	
P1 1)	=	13.87
P2 *	=	12.67

Junction Cone

α	=	11°10'04"
S	=	115.63
r1 max	=	
r2	=	

Collar

H1 *	=	11.18
H2 1)	=	11.07

Commencement of Rifling

G1 1)*	=	10.50	
G 1)*	=	10.32	
α1	=	90°	
h *	=	0.29	
s	=		
i 1)	=	0°58'14"	
w	=		

Barrel

F 1)*	=	10.16
Z 1)	=	10.41

Grooves

b	=	3.56	
N	=	7	
u	=	381.00	
Q	=	84.25	mm²

Dimensions in << mm >>
Dimensions and Tolerances for Proof Barrels
see Appendix CR 1.

Notes: 1) Check for safety reasons
* Basic dimensions