C.I.P.	450/400 N.E. 3"	TAB.	II
		Date	84-06-14
	Country of Origin: GB	Revision	08-04-15

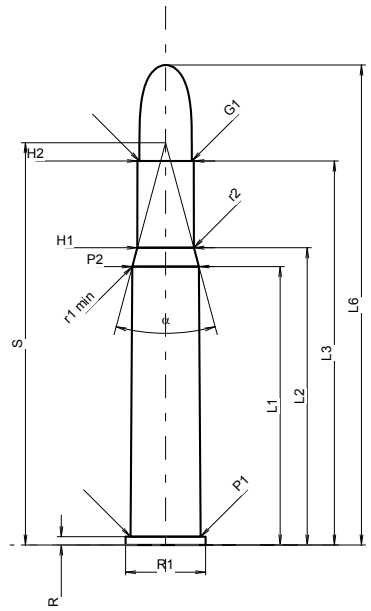

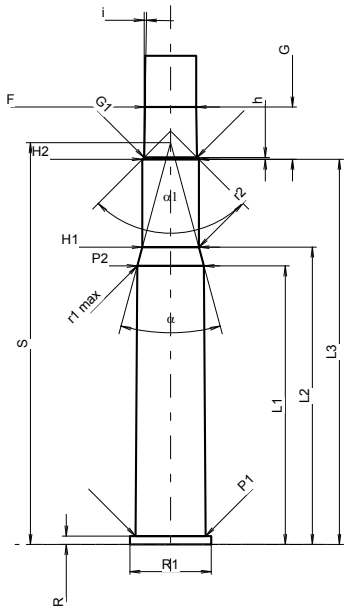

Scale 1:1.5

CARTRIDGE MAXI

Lengths

L1 *	=	55.26	
L2 *	=	59.00	
L3 1)	=	76.20	
L4	=		
L5	=		
L6	=	95.25	

Case Head

R 1)	=	1.65	-0.25
R1	=	15.87	
R3	=		
E	=		
E1	=		
e min	=		
δ	=		
f	=		
β	=		

Powder Chamber

P1	=	13.92
P2 *	=	13.21

Junction Cone

α	=	30°04'56"
S	=	79.84
r1 min	=	14.53
r2	=	14.53

Collar

H1 *	=	11.20
H2 1)	=	11.18

Projectile

G1 1)	=	10.41
G2	=	
F	=	
L3+G 1)	=	86.58

Pressures (Energies)
Method Transducer

Pmax	=	2800	bar
PK	=	3220	bar
PE	=	3500	bar
M	=	25.00	
EE	=	5310	Joule

Miscellaneous Dimensions

Fe 1)4)	=	0.15
delta L	=	

CHAMBER MINI

Lengths

L1 *	=	55.29
L2 *	=	59.02
L3 1)	=	76.45

Breech

R 1)	=	1.68
R1	=	16.13
R2	=	
R3	=	
r	=	

Powder Chamber

E	=	
P1 1)	=	13.94
P2 *	=	13.24

Junction Cone

α 1)	=	30°18'8"
S	=	79.74
r1 max	=	14.53
r2	=	14.53

Collar

H1 *	=	11.22
H2 1)	=	11.20

Commencement of Rifling

G1 1)*	=	10.50
G 1)*	=	10.38
α1	=	90°
h *	=	0.35
s	=	
i 1)	=	0°58'16"
w	=	

Barrel

F 1)*	=	10.16
Z 1)	=	10.41

Grooves

b	=	3.56	
N	=	7	
u	=	381.00	
Q	=	84.25	mm²

Dimensions in << mm >>
Dimensions and Tolerances for Proof Barrels
see Appendix CR 1.

Notes:
1) Check for safety reasons
4) Headspace on Rim
* Basic dimensions