C.I.P.	450 No.2 N.E. 3"1/2 Eley Country of Origin: GB	TAB. II Date 98-01-27 Revision 02-05-15

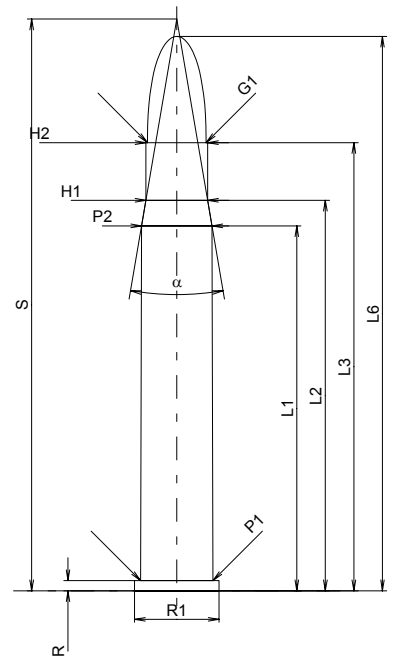

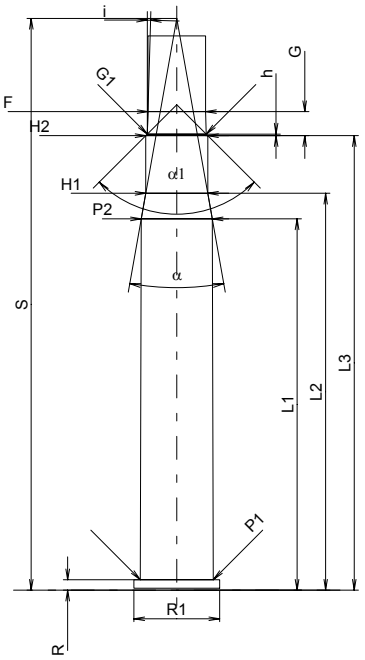

Scale 1:1.5

CARTRIDGE MAXI

Lengths

L1 *	=	72.39	
L2 *	=	77.47	
L3 1)	=	88.90	
L4	=		
L5	=		
L6	=	109.98	

Case Head

R 1)	=	2.03	-0.25
R1	=	16.76	
R3	=		
E	=		
E1	=		
e min	=		
δ	=		
f	=		
β	=		

Powder Chamber

P1	=	14.35
P2 *	=	13.97

Junction Cone

α	=	19°19'36"
S	=	113.41
r1 min	=	
r2	=	

Collar

H1 *	=	12.24
H2 1)	=	12.24

Projectile

G1 1)	=	11.63
G2	=	
F	=	
L3+G 1)	=	93.67

Pressures (Energies)
Method Transducer

Pmax	=	2800	bar
PK	=	3220	bar
PE	=	3500	bar
M	=	25.00	
EE	=	7140	Joule

Miscellaneous Dimensions

Fe 1)	=	0.15
delta L	=	

CHAMBER MINI

Lengths

L1 *	=	73.66
L2 *	=	78.74
L3 1)	=	90.17

Breech

R 1)	=	2.08
R1	=	17.01
R2	=	
R3	=	
r	=	

Powder Chamber

E	=	
P1 1)	=	14.48
P2 *	=	14.09

Junction Cone

α	=	20°05'34"
S	=	113.43
r1 max	=	
r2	=	

Collar

H1 *	=	12.29
H2 1)	=	12.29

Commencement of Rifling

G1 1)*	=	11.68
G 1)*	=	4.77
α1	=	90°
h *	=	0.31
s	=	
i 1)	=	1°36'19"
w	=	

Barrel

F 1)*	=	11.43
Z 1)	=	11.61

Grooves

b	=	3.56	
N	=	7	
u	=	381.00	
Q	=	104.89	mm²

Dimensions in << mm >>
Dimensions and Tolerances for Proof Barrels
see Appendix CR 1.

Notes: 1) Check for safety reasons
* Basic dimensions