C.I.P.	45-75 Win.	TAB.	II
		Date	07-05-15
	Country of Origin: US	Revision	08-04-15

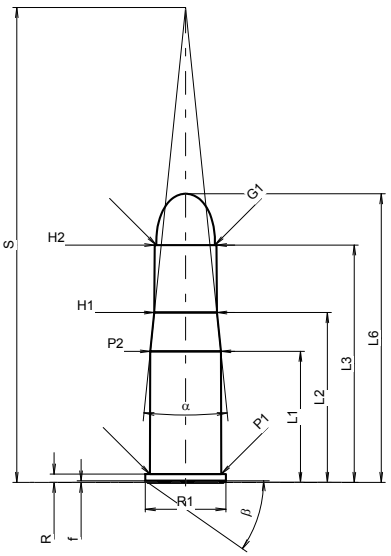

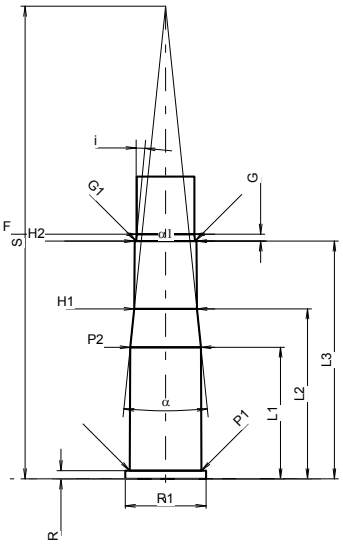

Scale 1:1.5

CARTRIDGE MAXI

Lengths

L1	=	26.00	
L2	=	33.70	
L3 1)	=	47.10	
L4	=		
L5	=		
L6	=	57.28	

Case Head

R 1)	=	1.63	-0.25
R1	=	15.98	
R3	=		
E	=		
E1	=		
e min	=		
δ	=		
f	=	0.30	
β	=	35°	

Powder Chamber

P1	=	14.20
P2 *	=	14.00

Junction Cone

α *	=	11°42'57"
S *	=	94.23
r1 min	=	
r2	=	

Collar

H1 *	=	12.42
H2 1)	=	12.26

Projectile

G1 1)	=	11.66
G2	=	
F	=	
L3+G 1)	=	48.48

Pressures (Energies)
Method Transducer

Pmax	=	2050	bar
PK	=	2358	bar
PE	=	2563	bar
M	=	25.00	
EE	=	3700	Joule

Miscellaneous Dimensions

Fe 1)4)	=	0.15
delta L	=	

CHAMBER MINI

Lengths

L1	=	26.12
L2	=	33.74
L3 1)	=	47.18

Breech

R 1)	=	1.63
R1	=	16.03
R2	=	
R3	=	
r	=	

Powder Chamber

E	=	
P1 1)	=	14.23
P2 *	=	14.03

Junction Cone

α *	=	11°50'17"
S *	=	93.78
r1 max	=	
r2	=	

Collar

H1 *	=	12.45
H2 1)	=	12.29

Commencement of Rifling

G1 1)*	=	11.69
G 1)	=	1.38
α1 *	=	180°
h	=	
s	=	
i 1)*	=	5°22'54"
w	=	

Barrel

F 1)*	=	11.43
Z 1)	=	11.58

Grooves

b	=	3.58	
N	=	6	
u	=	508.00	
Q	=	104.25	mm²

Dimensions in << mm >>
Dimensions and Tolerances for Proof Barrels
see Appendix CR 1.

Notes:
1) Check for safety reasons
4) Headspace on Rim
* Basic dimensions