C.I.P.	6 x 70 R Country of Origin: DE	TAB. II Date 00-06-28 Revision 02-05-15

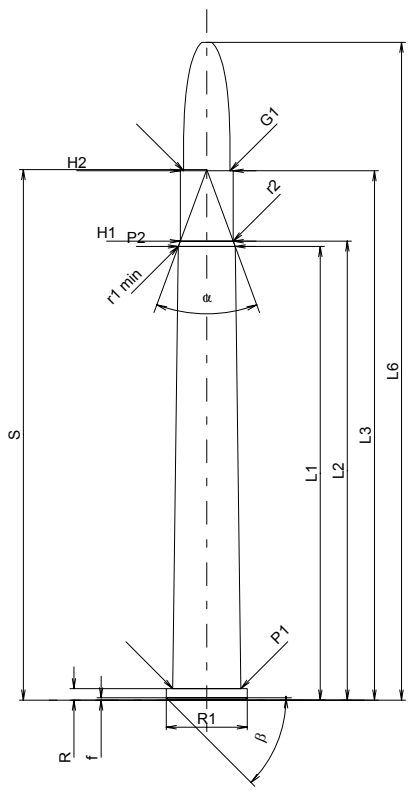

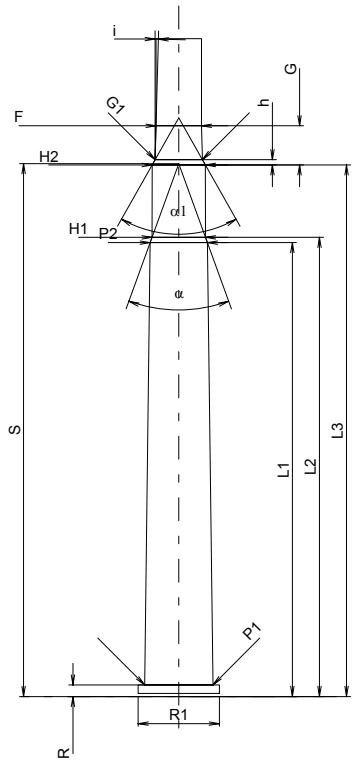

Scale 1:1

CARTRIDGE MAXI

Lengths

L1 *	=	60.00
L2 *	=	60.69
L3 1)	=	70.00
L4	=	
L5	=	
L6	=	87.00

Case Head

R 1)	=	1.52	-0.25
R1	=	10.70	
R3	=		
E	=		
E1	=		
e min	=		
δ	=		
f	=	0.30	
β	=	45°	

Powder Chamber

P1	=	9.00
P2 *	=	7.52

Junction Cone

α	=	40°33'54"
S	=	70.17
r1 min	=	0.50
r2	=	0.50

Collar

H1 *	=	7.01
H2 1)	=	7.01

Projectile

G1 1)	=	6.17
G2	=	
F	=	
L3+G 1)	=	75.18

Pressures (Energies)
Method Transducer

Pmax	=	2600	bar
PK	=	2990	bar
PE	=	3250	bar
M	=	25.00	
EE	=	1785	Joule

Miscellaneous Dimensions

Fe 1)	=	0.15
delta L	=	

CHAMBER MINI

Lengths

L1 *	=	60.03
L2 *	=	60.72
L3 1)	=	70.30

Breech

R 1)	=	1.52
R1	=	10.75
R2	=	
R3	=	
r	=	

Powder Chamber

E	=	
P1 1)	=	9.03
P2 *	=	7.57

Junction Cone

α	=	39°49'58"
S	=	70.48
r1 max	=	
r2	=	

Collar

H1 *	=	7.07
H2 1)	=	7.04

Commencement of Rifling

G1 1)*	=	6.26
G 1)*	=	5.18
α1	=	58°57'06"
h *	=	0.69
s	=	
i 1)	=	1°31'51"
w	=	

Barrel

F 1)*	=	6.02
Z 1)	=	6.17

Grooves

b	=	1.73	
N	=	6	
u	=	254.00	
Q	=	29.25	mm²

Dimensions in << mm >>
Dimensions and Tolerances for Proof Barrels
see Appendix CR 1.

Notes: 1) Check for safety reasons
* Basic dimensions