C.I.P.	8 x 57 IRS Country of Origin: DE	TAB.	II
		Date	84-06-14
		Revision	16-05-18

Alternative Names: 8 x 57 JRS

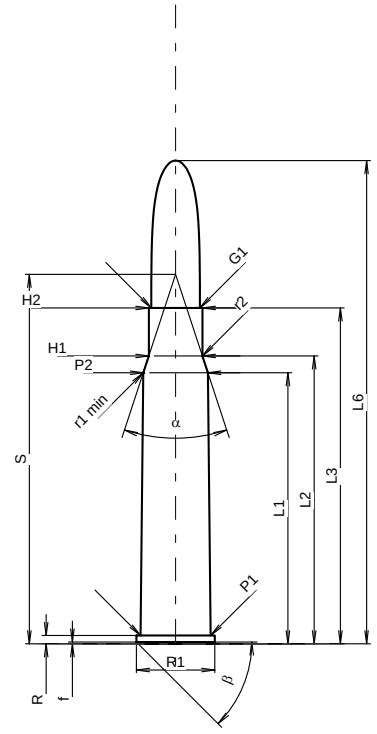

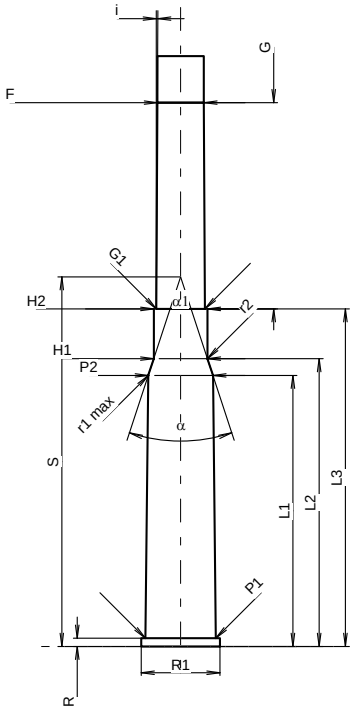

Scale 1:1.28

CARTRIDGE MAXI

Lengths

L1 *	=	46.00	
L2 *	=	48.85	
L3 1)	=	57.00	
L4	=		
L5	=		
L6	=	82.00	

Case Head

R 1)	=	1.40	-0.25
R1	=	13.32	
R3	=		
E	=		
E1	=		
e min	=		
δ	=		
f	=	0.30	
β	=	45°	

Powder Chamber

P1	=	11.92
P2 *	=	10.95

Junction Cone

α	=	36°19'34"
S	=	62.69
r1 min	=	0.50
r2	=	0.50

Collar

H1 *	=	9.08
H2 1)	=	9.08

Projectile

G1 1)	=	8.22
G2	=	
F	=	
L3+G 1)	=	92.00

Pressures (Energies)
Method Transducer

Pmax	=	3300	bar
PK	=	3795	bar
PE	=	4125	bar
M	=	25.00	
EE	=	3955	Joule

Miscellaneous Dimensions

Fe 1)4)	=	0.15
delta L	=	

CHAMBER MINI

Lengths

L1 *	=	46.00
L2 *	=	48.85
L3 1)	=	57.30

Breech

R 1)	=	1.40
R1	=	13.37
R2	=	
R3	=	
r	=	

Powder Chamber

E	=	
P1 1)	=	11.95
P2 *	=	10.98

Junction Cone

α	=	36°19'34"
S	=	62.73
r1 max	=	0.50
r2	=	0.50

Collar

H1 *	=	9.11
H2 1)	=	9.10

Commencement of Rifling

G1 1)*	=	8.24
G 1)*	=	35.00
α1	=	180°
h	=	
s	=	
i 1)	=	0°17'11"
w	=	

Barrel

F 1)*	=	7.89
Z 1)	=	8.20

Grooves

b	=	4.40	
N	=	4	
u	=	240.00	
Q	=	51.78	mm²

Dimensions in << mm >>
Dimensions and Tolerances for Proof Barrels
see Appendix CR 1.

Notes:
1) Check for safety reasons
4) Headspace on Rim
* Basic dimensions