C.I.P.	8,5 x 75 R Scheiring Country of Origin: AT	TAB. II Date 14-05-20 Revision

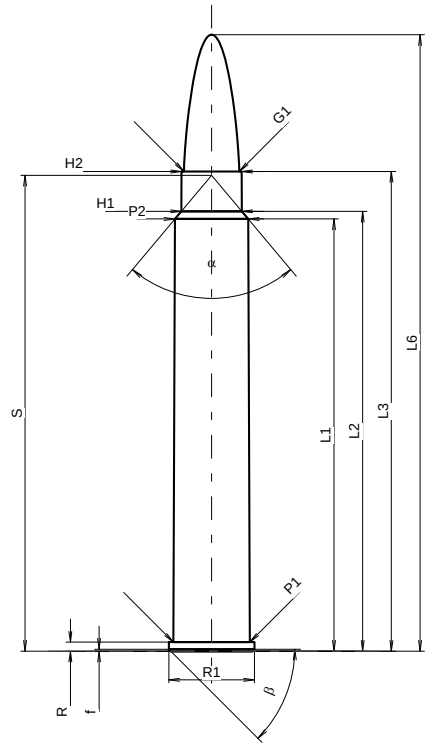

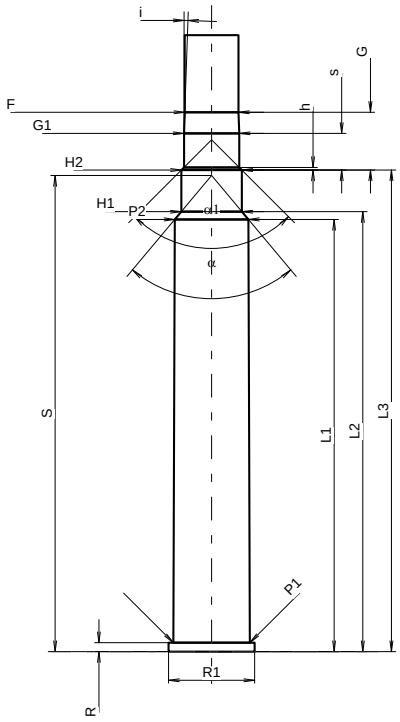

Scale 1:1.18

CARTRIDGE MAXI

Lengths

L1	=	67.30	
L2	=	68.50	
L3 *1)*	=	74.70	
L4	=		
L5	=		
L6	=	96.00	

Case Head

R *1)*	=	1.40	-0.25
R1	=	13.35	
R3	=		
E	=		
E1	=		
e min	=		
δ	=		
f	=	0.30	
β	=	45°	

Powder Chamber

P1	=	11.90
P2 *	=	11.43

Junction Cone

α *	=	80°
S *	=	74.10
r1 min	=	
r2	=	

Collar

H1 *	=	9.41
H2 *1)*	=	9.38

Projectile

G1 *1)*	=	8.61
G2	=	
F	=	
L3+G *1)*	=	83.70

Pressures (Energies)
Method Transducer

Pmax	=	3800	bar
PK	=	4370	bar
PE	=	4750	bar
M	=	25.00	
EE	=	5500	Joule

Miscellaneous Dimensions

Fe *1)4)*	=	0.15
delta L	=	

CHAMBER MINI

Lengths

L1	=	67.31
L2	=	68.51
L3 *1)*	=	75.00

Breech

R *1)*	=	1.40
R1	=	13.40
R2	=	
R3	=	
r	=	

Powder Chamber

E	=	
P1 *1)*	=	11.93
P2 *	=	11.46

Junction Cone

α *	=	80°
S *	=	74.14
r1 max	=	
r2	=	

Collar

H1 *	=	9.44
H2 *1)*	=	9.41

Commencement of Rifling

G1 *1)**	=	8.61
G *1)*	=	9.00
α1	=	90°
h	=	0.40
s *	=	5.71
i *1)**	=	2°
w	=	

Barrel

F *1)**	=	8.38
Z *1)*	=	8.59

Grooves

b	=	2.79	
N	=	6	
u	=	254.00	
Q	=	56.95	mm²

Dimensions in << mm >>
Dimensions and Tolerances for Proof Barrels
see Appendix CR1.

Notes:
1) Check for safety reasons
4) Headspace on Rim
* Basic dimensions