C.I.P.	7 x 57 R Country of Origin: DE	TAB. II Date 84-06-14 Revision 15-05-19

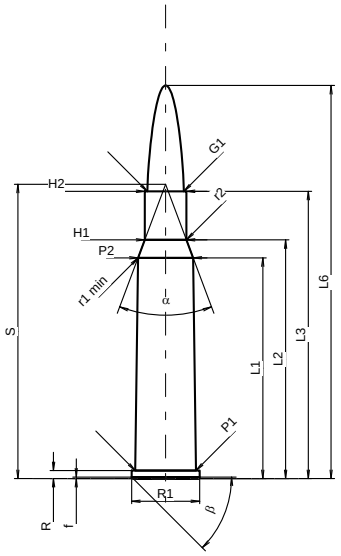

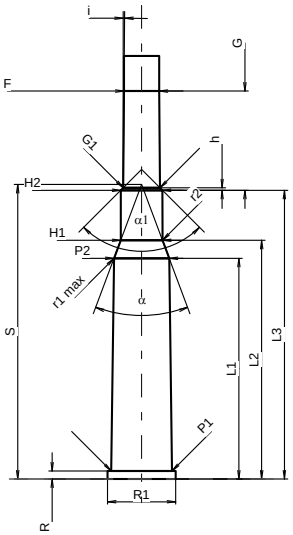

Scale 1:1.5

CARTRIDGE MAXI

Lengths

L1	=	43.80	
L2	=	47.37	
L3 *1)*	=	57.00	
L4	=		
L5	=		
L6	=	78.00	

Case Head

R *1)*	=	1.60	-0.25
R1	=	13.50	
R3	=		
E	=		
E1	=		
e min	=		
δ	=		
f	=	0.30	
β	=	45°	

Powder Chamber

P1	=	12.05
P2 *	=	10.92

Junction Cone

α *	=	41°00'24"
S	=	58.40
r1 min	=	0.50
r2	=	0.50

Collar

H1 *	=	8.25
H2 *1)*	=	8.25

Projectile

G1 *1)*	=	7.25
G2	=	
F	=	
L3+G *1)*	=	76.69

Pressures (Energies)
Method Transducer

Pmax	=	3400	bar
PK	=	3910	bar
PE	=	4250	bar
M	=	25.00	
EE	=	3390	Joule

Miscellaneous Dimensions

Fe *1)4)*	=	0.15
delta L	=	

CHAMBER MINI

Lengths

L1	=	43.80
L2	=	47.37
L3 *1)*	=	57.30

Breech

R *1)*	=	1.60
R1	=	13.55
R2	=	
R3	=	
r	=	

Powder Chamber

E	=	
P1 *1)*	=	12.08
P2 *	=	10.95

Junction Cone

α *1)**	=	41°00'25"
S	=	58.44
r1 max	=	0.50
r2	=	0.50

Collar

H1 *	=	8.28
H2 *1)*	=	8.27

Commencement of Rifling

G1 *1)**	=	7.30
G *1)*	=	19.69
α1	=	90°
h *	=	0.49
s	=	
i *1)**	=	0°28'38"
w	=	

Barrel

F *1)**	=	6.98
Z *1)*	=	7.24

Grooves

b	=	3.70	
N	=	4	
u *	=	220.00	
Q	=	40.29	mm²

Dimensions in << mm >>
Dimensions and Tolerances for Proof Barrels
see Appendix CR 1.

Notes:
1) Check for safety reasons
4) Headspace on Rim
* Basic dimensions