C.I.P.	577 N.E. 3"	TAB.	II
		Date	84-06-14
	Country of Origin: GB	Revision	12-05-30

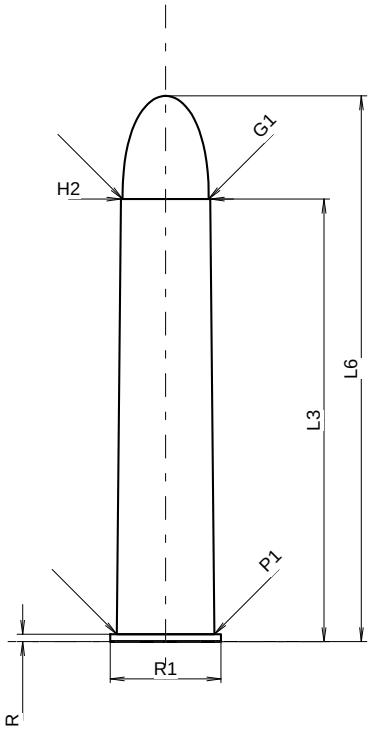

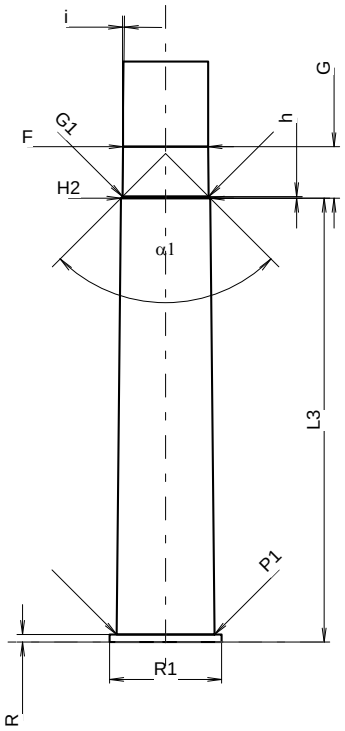

Scale 1:1.3

CARTRIDGE MAXI

Lengths

L1	=		
L2	=		
L3 1)	=	76.20	
L4	=		
L5	=		
L6	=	93.98	

Case Head

R 1)	=	1.27	-0.25
R1	=	19.05	
R3	=		
E	=		
E1	=		
e min	=		
δ	=		
f	=		
β	=		

Powder Chamber

P1	=	16.81
P2	=	

Junction Cone

α	=	
S	=	
r1 min	=	
r2	=	

Collar

H1	=	
H2 1)	=	15.37

Projectile

G1 1)	=	14.83	
G2	=		
F	=		
L3+G 1)	=	85.06	

Pressures (Energies)
Method Transducer

Pmax	=	2450	bar
PK	=	2818	bar
PE	=	3060	bar
M	=	25.00	
EE	=	9975	Joule

Miscellaneous Dimensions

Fe 1)4)	=	0.15
delta L	=	

CHAMBER MINI

Lengths

L1	=	
L2	=	
L3 1)	=	76.45

Breech

R 1)	=	1.30
R1	=	19.30
R2	=	
R3	=	
r	=	

Powder Chamber

E	=	
P1 1)	=	16.84
P2	=	

Junction Cone

α	=	
S	=	
r1 max	=	
r2	=	

Collar

H1	=	
H2 1)	=	15.39

Commencement of Rifling

G1 1)*	=	14.85	
G 1)*	=	8.86	
α1	=	90°	
h *	=	0.27	
s	=		
i 1)	=	0°38'01"	
w	=		

Barrel

F 1)*	=	14.66	
Z 1)	=	14.86	

Grooves

b	=	4.66	
N	=	7	
u	=	762.00	
Q	=	172.11	mm²

Dimensions in << mm >>
Dimensions and Tolerances for Proof Barrels
see Appendix CR 1.

Notes:
1) Check for safety reasons
4) Headspace on Rim
* Basic dimensions