C.I.P.	470 N.E. Country of Origin: GB	TAB. II Date 84-06-14 Revision 13-05-22

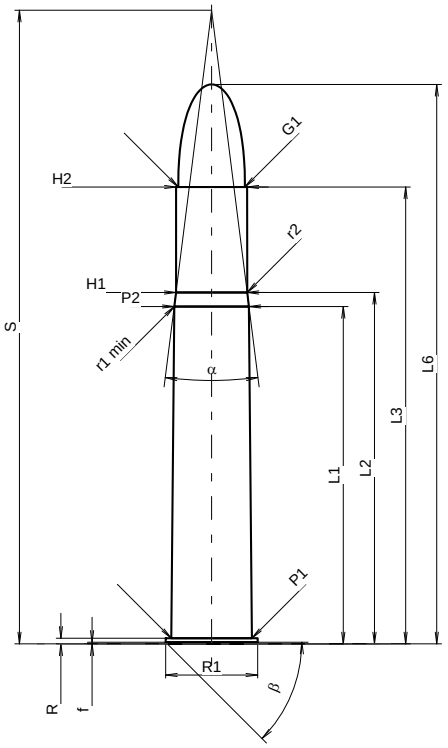

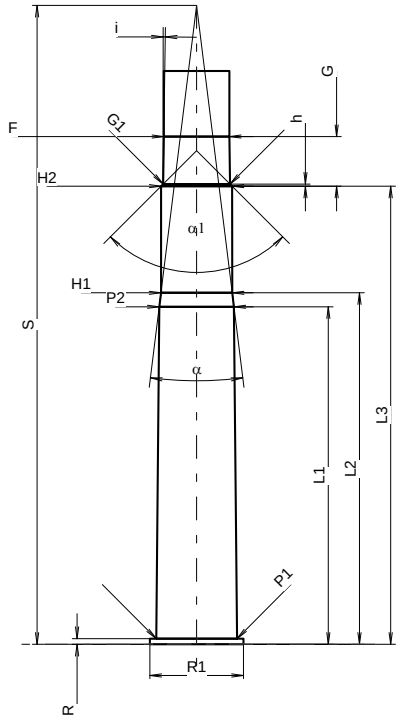

Scale 1:1.37

CARTRIDGE MAXI

Lengths

L1 *	=	60.96	
L2 *	=	63.50	
L3 1)	=	82.55	
L4	=		
L5	=		
L6	=	101.09	

Case Head

R 1)	=	1.02	-0.25
R1	=	16.64	
R3	=		
E	=		
E1	=		
e min	=		
δ	=		
f	=	0.30	
β	=	45°	

Powder Chamber

P1	=	14.55
P2 *	=	13.49

Junction Cone

α	=	14°21'39"
S	=	114.50
r1 min	=	6.35
r2	=	6.35

Collar

H1 *	=	12.85
H2 1)	=	12.80

Projectile

G1 1)	=	12.04
G2	=	
F	=	
L3+G 1)	=	91.51

Pressures (Energies)
Method Transducer

Pmax	=	2700	bar
PK	=	3105	bar
PE	=	3375	bar
M	=	25.00	
EE	=	6957	Joule

Miscellaneous Dimensions

Fe 1)4)	=	0.15
delta L	=	

CHAMBER MINI

Lengths

L1 *	=	60.99
L2 *	=	63.53
L3 1)	=	82.80

Breech

R 1)	=	1.04
R1	=	16.89
R2	=	
R3	=	
r	=	

Powder Chamber

E	=	
P1 1)	=	14.58
P2 *	=	13.51

Junction Cone

α	=	14°08'20"
S	=	115.46
r1 max	=	
r2	=	

Collar

H1 *	=	12.88
H2 1)	=	12.83

Commencement of Rifling

G1 1)*	=	12.10
G 1)*	=	8.96
α1	=	90°
h *	=	0.37
s	=	
i 1)	=	0°50'
w	=	

Barrel

F 1)*	=	11.85
Z 1)	=	12.05

Grooves

b	=	3.48	
N	=	7	
u	=	533.00	
Q	=	112.76	mm²

Dimensions in << mm >>
Dimensions and Tolerances for Proof Barrels
see Appendix CR 1.

Notes:
1) Check for safety reasons
4) Headspace on Rim
* Basic dimensions