C.I.P.	356 Win.	TAB.	II
		Date	84-06-14
	Country of Origin: US	Revision	11-05-25

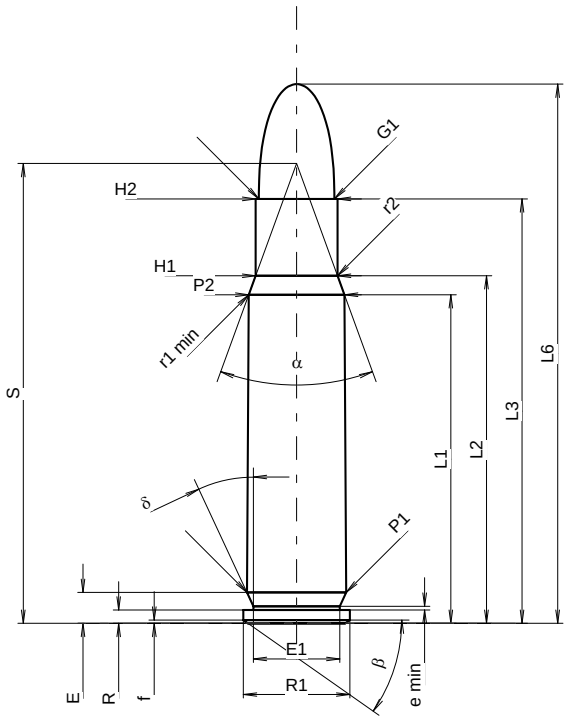

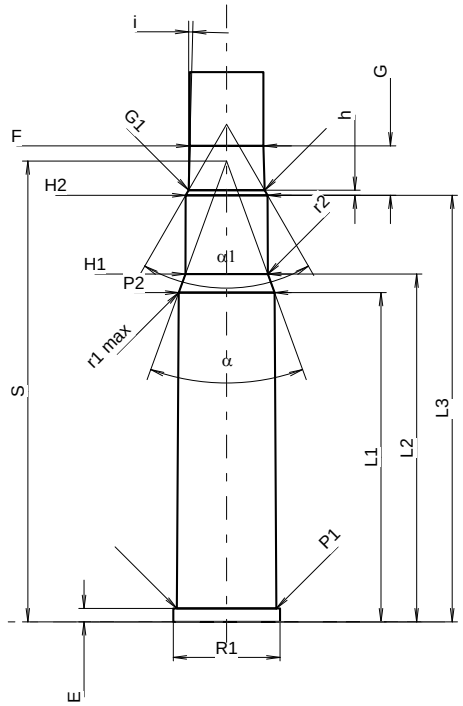

Scale 1.1:1

CARTRIDGE MAXI

Lengths

L1	=	39.62	
L2	=	41.91	
L3 *1)*	=	51.18	
L4	=		
L5	=		
L6	=	65.02	

Case Head

R *1)*	=	1.60	-0.25
R1	=	12.85	
R3	=		
E	=	3.72	
E1	=	10.41	
e min	=	0.46	
δ	=	25°	
f	=	0.38	
β	=	35°	

Powder Chamber

P1	=	11.96
P2 *	=	11.53

Junction Cone

α *	=	40°
S *	=	55.45
r1 min	=	0.76
r2	=	2.54

Collar

H1 *	=	9.86
H2 *1)*	=	9.86

Projectile

G1 *1)*	=	9.11
G2	=	
F	=	
L3+G *1)*	=	57.14

Pressures (Energies)
Method Transducer

Pmax	=	4150	bar
PK	=	4773	bar
PE	=	5190	bar
M	=	25.00	
EE	=	3705	Joule

Miscellaneous Dimensions

Fe *1)3)*	=	0.10
delta L	=	

CHAMBER MINI

Lengths

L1	=	39.69
L2	=	41.93
L3 *1)*	=	51.44

Breech

R *1)*	=	1.60
R1	=	12.88
R2	=	
R3	=	
r	=	

Powder Chamber

E	=	1.60
P1 *1)*	=	12.01
P2 *	=	11.56

Junction Cone

α *	=	40°
S *	=	55.57
r1 max	=	0.76
r2	=	2.79

Collar

H1 *	=	9.93
H2 *1)*	=	9.88

Commencement of Rifling

G1 *1)**	=	9.17
G *1)*	=	5.96
α1 *	=	60°
h	=	0.61
s	=	
i *1)**	=	1°30'
w	=	

Barrel

F *1)**	=	8.89
Z *1)*	=	9.09

Grooves

b	=	2.79	
N	=	6	
u	=	305.00	
Q	=	63.77	mm²

Dimensions in << mm >>
Dimensions and Tolerances for Proof Barrels
see Appendix CR 1.

Notes:
1) Check for safety reasons
3) Headspace on Shoulder
* Basic dimensions