C.I.P.	256 Win. Mag. Country of Origin: US	TAB.	II
		Date	84-06-14
		Revision	02-05-15

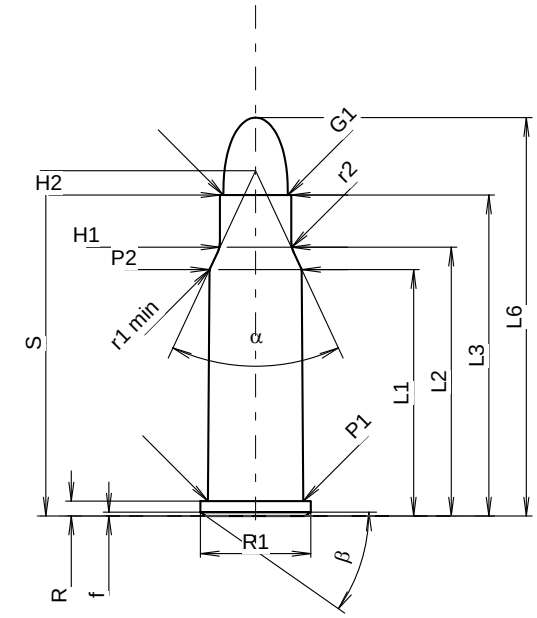

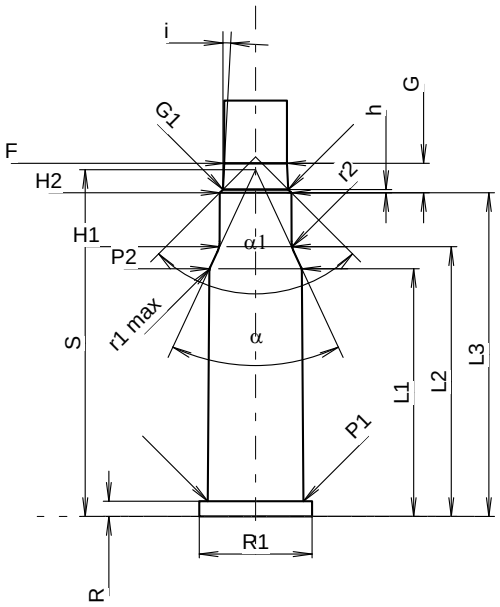

Scale 1.31:1

CARTRIDGE MAXI

Lengths

L1	=	24.98	
L2	=	27.25	
L3 1)	=	32.54	
L4	=		
L5	=		
L6	=	40.39	

Case Head

R 1)	=	1.52	-0.25
R1	=	11.18	
R3	=		
E	=		
E1	=		
e min	=		
δ	=		
f	=	0.40	
β	=	35°	

Powder Chamber

P1	=	9.68
P2 *	=	9.35

Junction Cone

α *	=	50°
S *	=	35.01
r1 min	=	0.76
r2	=	2.54

Collar

H1 *	=	7.24
H2 1)	=	7.24

Projectile

G1 1)	=	6.53
G2	=	
F	=	
L3+G 1)	=	35.52

Pressures (Energies)
Method Transducer

Pmax	=	3500	bar
PK	=	4025	bar
PE	=	4375	bar
M	=	17.50	
EE	=	1365	Joule

Miscellaneous Dimensions

Fe 1)	=	0.15
delta L	=	

CHAMBER MINI

Lengths

L1	=	25.11
L2	=	27.34
L3 1)	=	32.82

Breech

R 1)	=	1.55
R1	=	11.43
R2	=	
R3	=	
r	=	

Powder Chamber

E	=	
P1 1)	=	9.70
P2 *	=	9.37

Junction Cone

α *	=	50°
S *	=	35.16
r1 max	=	0.76
r2	=	2.54

Collar

H1 *	=	7.29
H2 1)	=	7.26

Commencement of Rifling

G1 1)*	=	6.63
G 1)	=	2.99
α1 *	=	90°
h	=	0.32
s	=	
i 1)*	=	3°
w	=	

Barrel

F 1)*	=	6.35
Z 1)	=	6.50

Grooves

b	=	2.01	
N	=	6	
u	=	356.00	
Q	=	32.59	mm²

Dimensions in << mm >>
Dimensions and Tolerances for Proof Barrels
see Appendix CR 1.

Notes: 1) Check for safety reasons
* Basic dimensions