C.I.P.	222 R Stief Country of Origin: DE	TAB. II Date 14-05-20 Revision

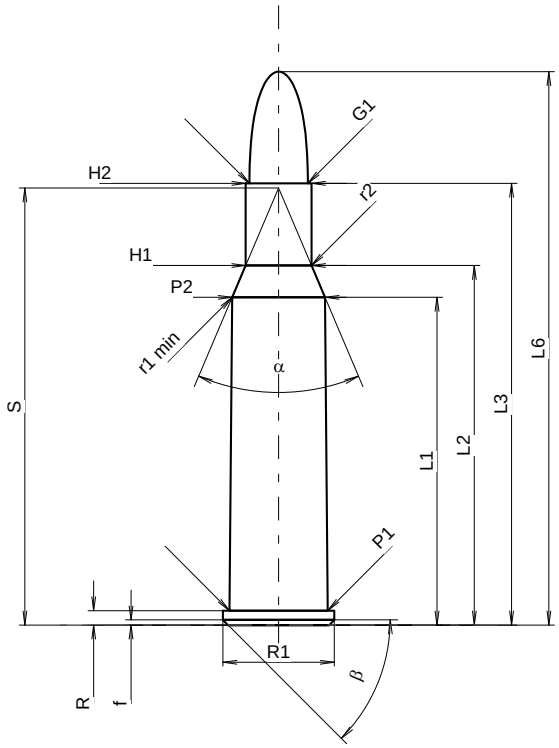

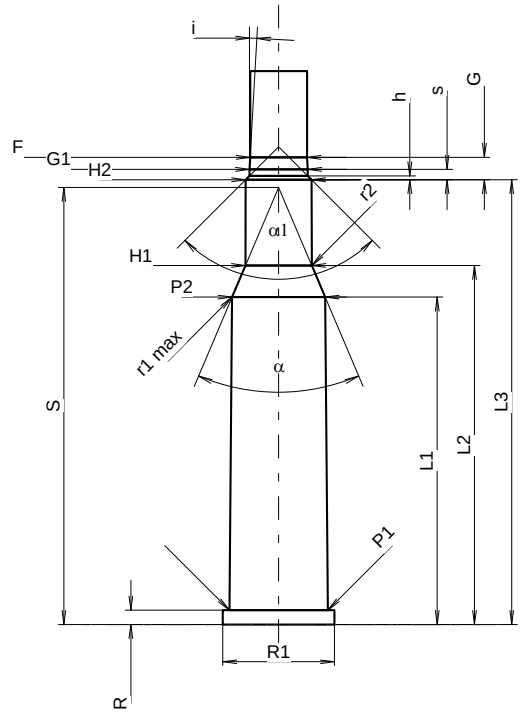

Scale 1.35:1

CARTRIDGE MAXI

Lengths

L1	=	32.04	
L2	=	35.15	
L3 1)	=	43.18	
L4	=		
L5	=		
L6	=	54.10	

Case Head

R 1)	=	1.40	-0.25
R1	=	10.90	
R3	=		
E	=		
E1	=		
e min	=		
δ	=		
f	=	0.50	
β	=	45°	

Powder Chamber

P1	=	9.59
P2 *	=	9.07

Junction Cone

α *	=	46°
S *	=	42.72
r1 min	=	0.64
r2	=	2.54

Collar

H1 *	=	6.43
H2 1)	=	6.43

Projectile

G1 1)	=	5.70
G2	=	
F	=	
L3+G 1)	=	45.37

Pressures (Energies)
Method Transducer

Pmax	=	3700	bar
PK	=	4255	bar
PE	=	4625	bar
M	=	25.00	
EE	=	1600	Joule

Miscellaneous Dimensions

Fe 1)4)	=	0.15
delta L	=	

CHAMBER MINI

Lengths

L1	=	32.01
L2	=	35.10
L3 1)	=	43.48

Breech

R 1)	=	1.40
R1	=	10.93
R2	=	
R3	=	
r	=	

Powder Chamber

E	=	
P1 1)	=	9.62
P2 *	=	9.10

Junction Cone

α *	=	46°
S *	=	42.73
r1 max	=	0.64
r2	=	3.18

Collar

H1 *	=	6.48
H2 1)	=	6.45

Commencement of Rifling

G1 1)*	=	5.69
G 1)	=	2.19
α1	=	90°
h	=	0.38
s *	=	1.02
i 1)*	=	3°10'47"
w	=	

Barrel

F 1)*	=	5.56
Z 1)	=	5.69

Grooves

b	=	2.03	
N	=	6	
u	=	356.00	
Q	=	25.09	mm²

Dimensions in << mm >>
Dimensions and Tolerances for Proof Barrels
see Appendix CR1.

Notes:
1) Check for safety reasons
4) Headspace on Rim
* Basic dimensions