C.I.P.	17 Hornet Country of Origin: US	TAB. II Date 14-05-20 Revision

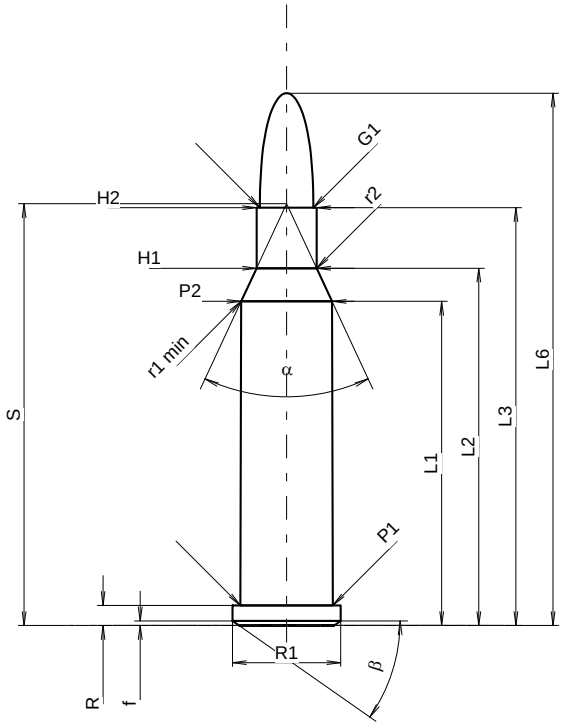

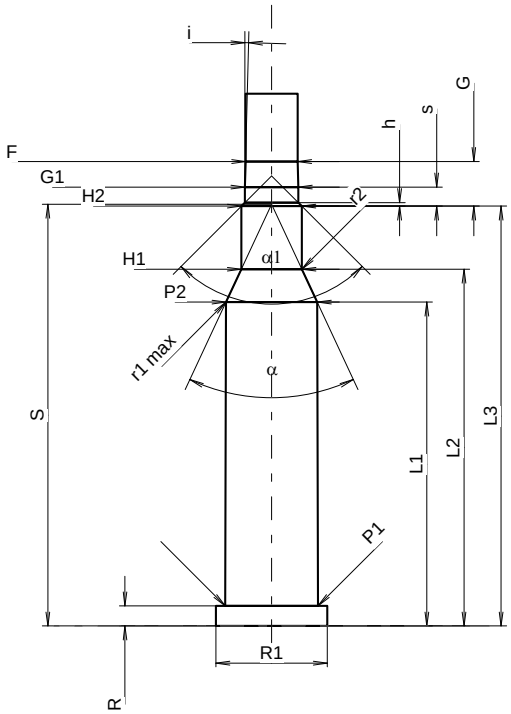

Scale 1.61:1

CARTRIDGE MAXI

Lengths

L1	=	26.60	
L2	=	29.32	
L3 1)	=	34.29	
L4	=		
L5	=		
L6	=	43.69	

Case Head

R 1)	=	1.65	-0.25
R1	=	8.89	
R3	=		
E	=		
E1	=		
e min	=		
δ	=		
f	=	0.38	
β	=	35°	

Powder Chamber

P1	=	7.59
P2 *	=	7.47

Junction Cone

α *	=	50°
S *	=	34.61
r1 min	=	0.64
r2	=	1.91

Collar

H1 *	=	4.93
H2 1)	=	4.93

Projectile

G1 1)	=	4.38
G2	=	
F	=	
L3+G 1)	=	37.95

Pressures (Energies)
Method Transducer

Pmax	=	3700	bar
PK	=	4255	bar
PE	=	4625	bar
M	=	17.50	
EE	=	820	Joule

Miscellaneous Dimensions

Fe 1)4)	=	0.15
delta L	=	

CHAMBER MINI

Lengths

L1	=	26.58
L2	=	29.28
L3 1)	=	34.46

Breech

R 1)	=	1.65
R1	=	9.14
R2	=	
R3	=	
r	=	

Powder Chamber

E	=	
P1 1)	=	7.62
P2 *	=	7.49

Junction Cone

α *	=	50°
S *	=	34.61
r1 max	=	0.64
r2	=	1.91

Collar

H1 *	=	4.97
H2 1)	=	4.96

Commencement of Rifling

G1 1)*	=	4.38
G 1)	=	3.66
α1	=	90°
h	=	0.29
s *	=	1.56
i 1)*	=	1°30'
w	=	

Barrel

F 1)*	=	4.27
Z 1)	=	4.37

Grooves

b	=	1.57	
N	=	6	
u	=	228.00	
Q	=	14.80	mm²

Dimensions in << mm >>
Dimensions and Tolerances for Proof Barrels
see Appendix CR1.

Notes:
1) Check for safety reasons
4) Headspace on Rim
* Basic dimensions