C.I.P.	257 Roberts Country of Origin: US	TAB.	I
		Date	84-06-14
		Revision	02-05-15

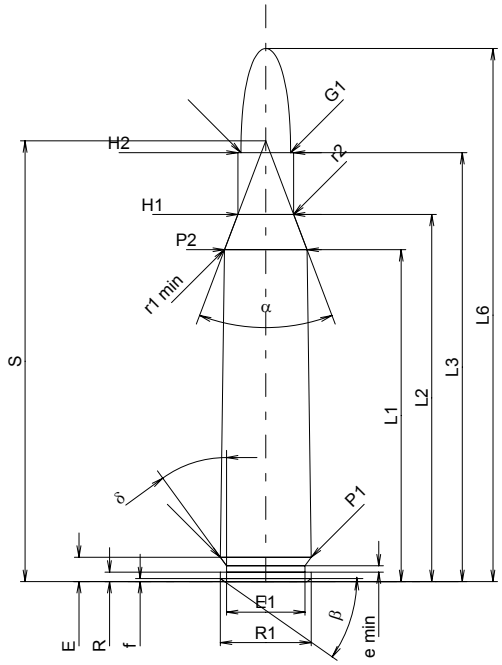

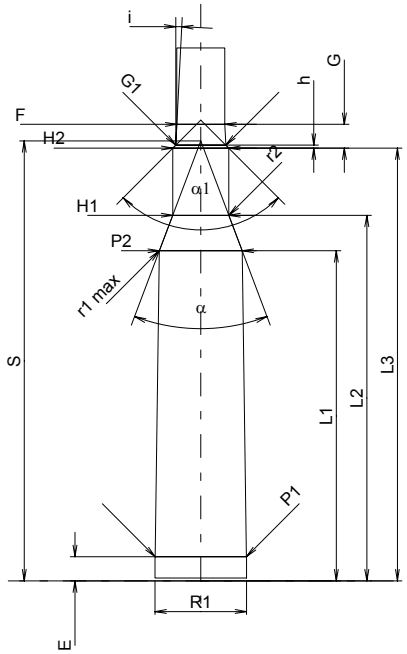

Scale 1:1

CARTRIDGE MAXI

Lengths

L1 1)	=	43.88	-0.20
L2 1)	=	48.55	-0.20
L3 1)	=	56.72	
L4	=		
L5	=		
L6	=	70.49	

Case Head

R	=	1.24
R1	=	12.01
R3	=	
E	=	3.20
E1	=	10.39
e min	=	0.84
δ	=	36°
f	=	0.38
β	=	35°

Powder Chamber

P1	=	12.02	
P2 1)*	=	10.91	-0.20

Junction Cone

α *	=	41°30'
S *	=	58.28
r1 min	=	0.76
r2	=	2.54

Collar

H1 *	=	7.37
H2 1)	=	7.37

Projectile

G1 1)	=	6.55
G2	=	
F	=	
L3+G 1)	=	59.85

Pressures (Energies)
Method Transducer

Pmax	=	3550	bar
PK	=	4083	bar
PE	=	4440	bar
M	=	25.00	
EE	=	2850	Joule

Miscellaneous Dimensions

Fe 1)	=	0.15
delta L	=	0.15

CHAMBER MINI

Lengths

L1	=	43.66
L2	=	48.36
L3 1)	=	57.25

Breech

R	=	
R1	=	12.13
R2	=	
R3	=	
r	=	

Powder Chamber

E	=	3.20
P1 1)	=	12.04
P2 *	=	10.96

Junction Cone

α 1)*	=	41°18'
S *	=	58.20
r1 max	=	0.76
r2	=	3.18

Collar

H1 *	=	7.42
H2 1)	=	7.39

Commencement of Rifling

G1 1)*	=	6.63
G 1)	=	3.13
α1 *	=	90°
h	=	0.38
s	=	
i 1)*	=	2°55'
w	=	

Barrel

F 1)*	=	6.35
Z 1)	=	6.50

Grooves

b	=	2.41	
N	=	6	
u	=	254.00	
Q	=	32.78	mm²

Dimensions in << mm >>
Dimensions and Tolerances for Proof Barrels
see Appendix CR 1.

Notes: 1) Check for safety reasons
* Basic dimensions