C.I.P.	9,5 x 66 SE v. H.	TAB.	I
		Date	96-05-24
	Country of Origin: DE	Revision	02-05-15

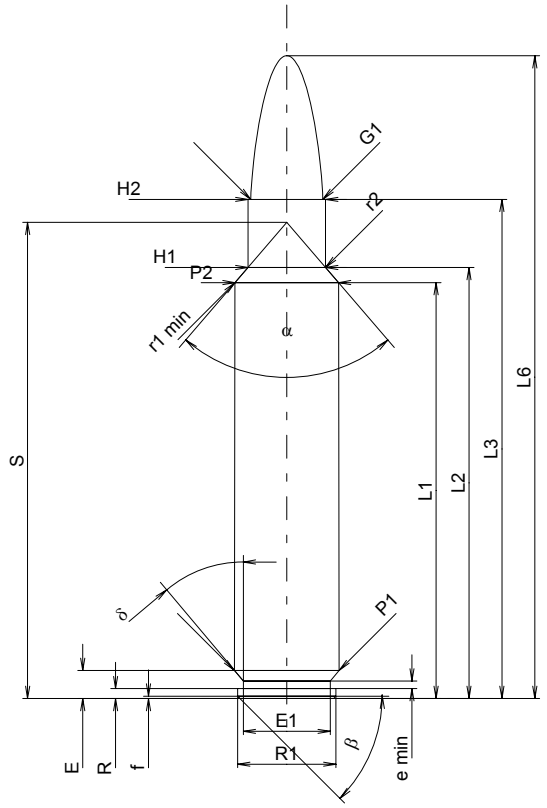

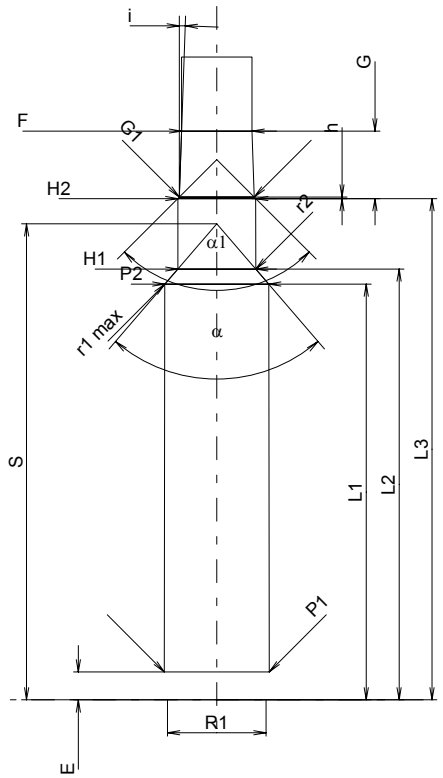

Scale 1:1

CARTRIDGE MAXI

Lengths

L1 1)*	=	55.00	-0.20
L2 1)*	=	57.00	-0.20
L3 1)	=	66.00	
L4	=		
L5	=		
L6	=	85.00	

Case Head

R	=	1.30
R1	=	13.00
R3	=	
E	=	3.70
E1	=	11.50
e min	=	1.00
δ	=	40°
f	=	0.30
β	=	45°

Powder Chamber

P1	=	13.85	
P2 1)*	=	13.70	-0.20

Junction Cone

α	=	81°23'28"
S	=	62.97
r1 min	=	0.50
r2	=	1.00

Collar

H1 *	=	10.26
H2 1)	=	10.26

Projectile

G1 1)	=	9.55
G2	=	
F	=	
L3+G 1)	=	74.92

Pressures (Energies)
Method Transducer

Pmax	=	4400	bar
PK	=	5060	bar
PE	=	5500	bar
M	=	25.00	
EE	=	6080	Joule

Miscellaneous Dimensions

Fe 1)	=	0.10
delta L	=	

CHAMBER MINI

Lengths

L1 *	=	54.99
L2 *	=	56.98
L3 1)	=	66.30

Breech

R	=	1.30
R1	=	13.05
R2	=	
R3	=	
r	=	

Powder Chamber

E	=	3.70
P1 1)	=	13.88
P2 *	=	13.73

Junction Cone

α 1)	=	81°30'36"
S	=	62.96
r1 max	=	0.50
r2	=	1.00

Collar

H1 *	=	10.30
H2 1)	=	10.29

Commencement of Rifling

G1 1)*	=	9.91
G 1)*	=	8.92
α1	=	90°
h *	=	0.19
s	=	
i 1)	=	2°00'02"
w	=	

Barrel

F 1)*	=	9.30
Z 1)	=	9.55

Grooves

b	=	2.92	
N	=	6	
u	=	305.00	
Q	=	70.16	mm²

Dimensions in << mm >>
Dimensions and Tolerances for Proof Barrels
see Appendix CR 1.

Notes: 1) Check for safety reasons
* Basic dimensions