C.I.P.	9,5 x 57 Mannl. Sch.	TAB.	I
		Date	95-06-28
	Country of Origin: AT	Revision	02-05-15

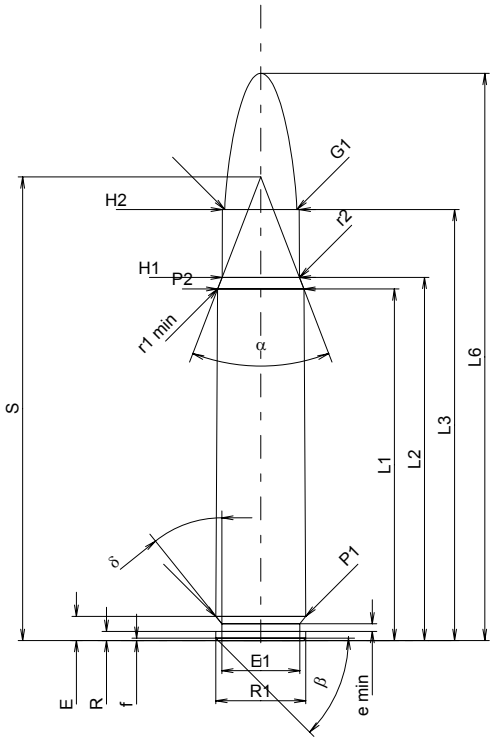

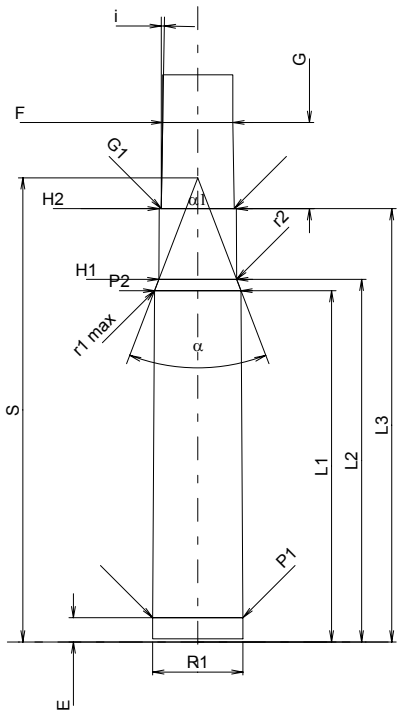

Scale 1:1

CARTRIDGE MAXI

Lengths

L1 1)*	=	46.50	-0.20
L2 1)*	=	48.02	-0.20
L3 1)	=	57.00	
L4	=		
L5	=		
L6	=	75.00	

Case Head

R	=	1.20
R1	=	11.90
R3	=	
E	=	3.20
E1	=	10.30
e min	=	1.00
δ	=	38°39'35"
f	=	0.30
β	=	45°

Powder Chamber

P1	=	11.90	
P2 1)*	=	11.40	-0.20

Junction Cone

α	=	42°06'01"
S	=	61.31
r1 min	=	0.50
r2	=	0.50

Collar

H1 *	=	10.23
H2 1)	=	10.18

Projectile

G1 1)	=	9.55
G2	=	
F	=	
L3+G 1)	=	68.40

Pressures (Energies)
Method Transducer

Pmax	=	3050	bar
PK	=	3508	bar
PE	=	3810	bar
M	=	25.00	
EE	=	6065	Joule

Miscellaneous Dimensions

Fe 1)	=	0.15
delta L	=	

CHAMBER MINI

Lengths

L1 *	=	46.46
L2 *	=	47.96
L3 1)	=	57.30

Breech

R	=	1.20
R1	=	11.95
R2	=	
R3	=	
r	=	

Powder Chamber

E	=	3.20
P1 1)	=	11.93
P2 *	=	11.43

Junction Cone

α 1)	=	41°56'49"
S	=	61.37
r1 max	=	0.50
r2	=	0.50

Collar

H1 *	=	10.28
H2 1)	=	10.22

Commencement of Rifling

G1 1)*	=	9.65
G 1)*	=	11.40
α1	=	180°
h	=	
s	=	
i 1)	=	0°57'17"
w	=	

Barrel

F 1)*	=	9.27
Z 1)	=	9.62

Grooves

b	=	4.60	
N	=	4	
u	=	300.00	
Q	=	70.85	mm²

Dimensions in << mm >>
Dimensions and Tolerances for Proof Barrels
see Appendix CR 1.

Notes: 1) Check for safety reasons
* Basic dimensions