C.I.P.	9,3 x 66 Sako Country of Origin: FI	TAB.	I
		Date	02-01-22
		Revision	02-05-15

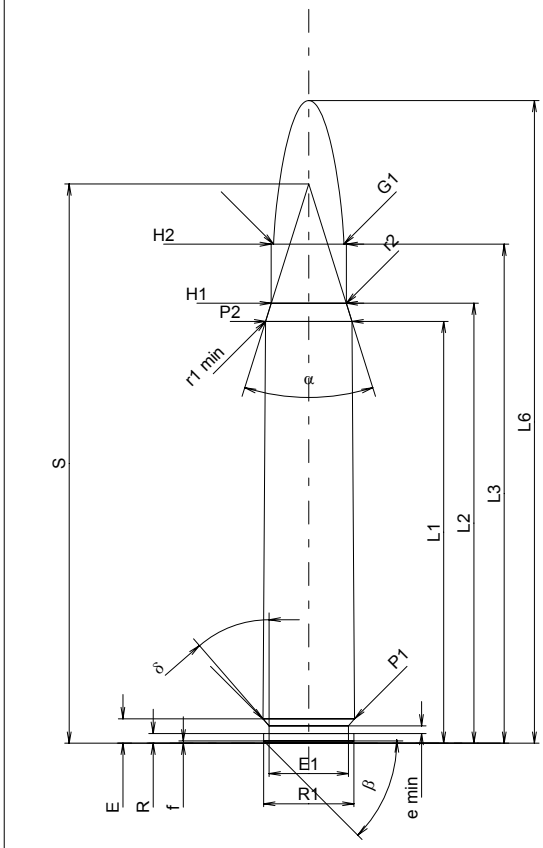

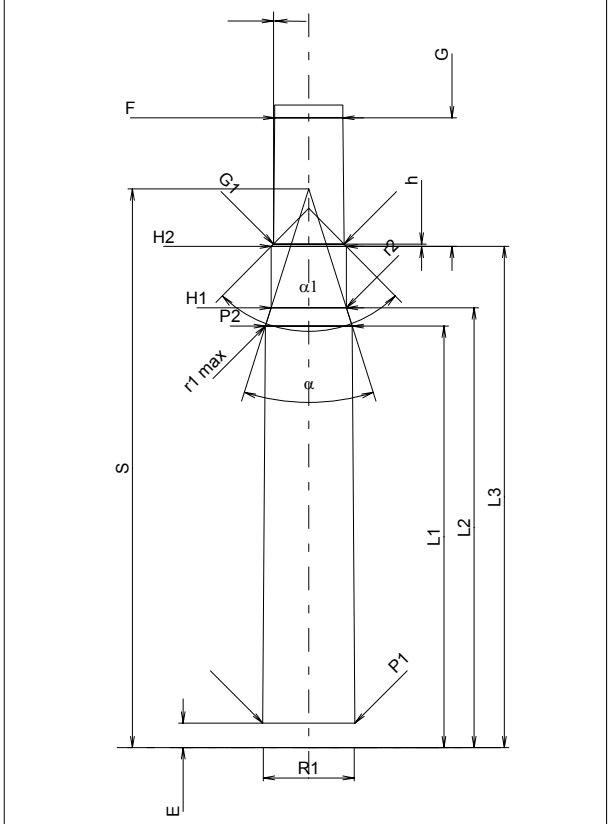

Scale 1:1

CARTRIDGE MAXI

Lengths

L1 1)*	=	55.80	-0.20
L2 1)*	=	58.20	-0.20
L3 1)	=	66.00	
L4	=		
L5	=		
L6	=	85.00	

Case Head

R	=	1.30
R1	=	11.95
R3	=	
E	=	3.24
E1	=	10.50
e min	=	1.00
δ	=	41°
f	=	0.30
β	=	45°

Powder Chamber

P1	=	12.13	
P2 1)*	=	11.43	-0.20

Junction Cone

α	=	34°55'31"
S	=	73.97
r1 min	=	0.50
r2	=	0.50

Collar

H1 *	=	9.92
H2 1)	=	9.92

Projectile

G1 1)	=	9.30
G2	=	
F	=	
L3+G 1)	=	83.01

Pressures (Energies)
Method Transducer

Pmax	=	4150	bar
PK	=	4773	bar
PE	=	5188	bar
M	=	25.00	
EE	=	6000	Joule

Miscellaneous Dimensions

Fe 1)	=	0.10
delta L	=	

CHAMBER MINI

Lengths

L1 *	=	55.75
L2 *	=	58.17
L3 1)	=	66.30

Breech

R	=	
R1	=	12.00
R2	=	
R3	=	
r	=	

Powder Chamber

E	=	3.24
P1 1)	=	12.18
P2 *	=	11.48

Junction Cone

α 1)	=	35°05'06"
S	=	73.91
r1 max	=	0.50
r2	=	0.50

Collar

H1 *	=	9.95
H2 1)	=	9.94

Commencement of Rifling

G1 1)*	=	9.35
G 1)*	=	17.01
α1	=	89°02'12"
h *	=	0.30
s	=	
i 1)	=	0°36'
w	=	

Barrel

F 1)*	=	9.00
Z 1)	=	9.28

Grooves

b	=	3.14	
N	=	6	
u	=	360.00	
Q	=	66.31	mm²

Dimensions in << mm >>
Dimensions and Tolerances for Proof Barrels
see Appendix CR 1.

Notes: 1) Check for safety reasons
* Basic dimensions