C.I.P.	9 x 57 Country of Origin: DE	TAB.	I
		Date	84-06-14
		Revision	04-05-18

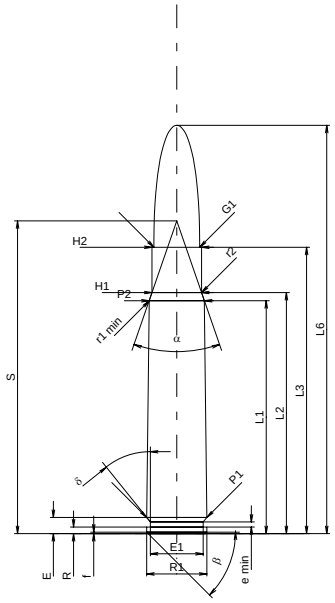

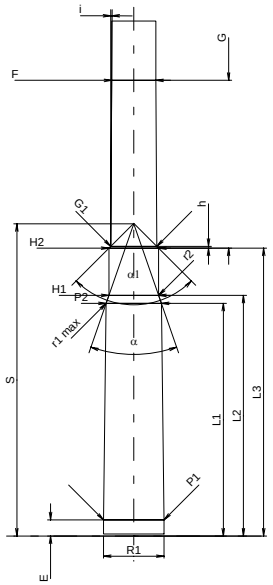

Scale 1:1.5

CARTRIDGE MAXI

Lengths

L1 1)*	=	46.20	-0.20
L2 1)*	=	47.82	-0.20
L3 1)	=	56.80	
L4	=		
L5	=		
L6	=	81.00	

Case Head

R	=	1.30
R1	=	11.95
R3	=	
E	=	3.20
E1	=	10.50
e min	=	1.00
δ	=	38°39'35"
f	=	0.30
β	=	45°

Powder Chamber

P1	=	11.94	
P2 1)*	=	10.95	-0.20

Junction Cone

α	=	38°08'17"
S	=	62.04
r1 min	=	0.50
r2	=	0.50

Collar

H1 *	=	9.83
H2 1)	=	9.83

Projectile

G1 1)	=	9.08
G2	=	
F	=	
L3+G 1)	=	90.10

Pressures (Energies)
Method Transducer

Pmax	=	2800	bar
PK	=	3220	bar
PE	=	3500	bar
M	=	25.00	
EE	=	3650	Joule

Miscellaneous Dimensions

Fe 1)	=	0.15
delta L	=	

CHAMBER MINI

Lengths

L1 *	=	46.16
L2 *	=	47.74
L3 1)	=	57.10

Breech

R	=	1.30
R1	=	12.00
R2	=	
R3	=	
r	=	

Powder Chamber

E	=	3.20
P1 1)	=	11.97
P2 *	=	10.98

Junction Cone

α 1)	=	38°23'09"
S	=	61.93
r1 max	=	0.50
r2	=	0.50

Collar

H1 *	=	9.88
H2 1)	=	9.87

Commencement of Rifling

G1 1)*	=	9.15
G 1)*	=	33.30
α1	=	90°
h	=	0.36
s	=	
i 1)	=	0°19'05"
w	=	

Barrel

F 1)*	=	8.78
Z 1)	=	9.06

Grooves

b	=	4.60	
N	=	4	
u	=	360.00	
Q	=	63.25	mm²

Dimensions in << mm >>
Dimensions and Tolerances for Proof Barrels
see Appendix CR 1.

Notes: 1) Check for safety reasons
* Basic dimensions