C.I.P.	8 x 75 S Country of Origin: DE	TAB.	I
		Date	84-06-14
		Revision	02-05-15

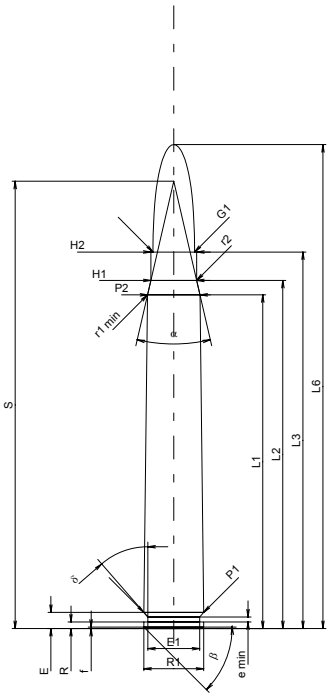

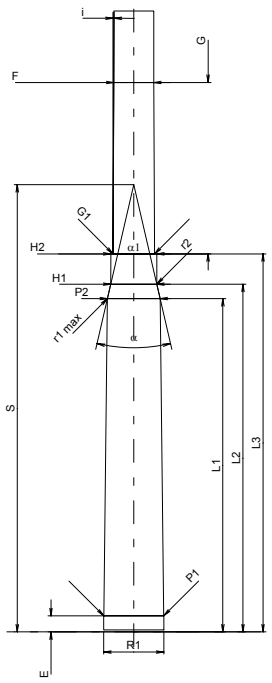

Scale 1:1.5

CARTRIDGE MAXI

Lengths

L1 1)*	=	66.20	-0.20
L2 1)*	=	69.06	-0.20
L3 1)	=	74.70	
L4	=		
L5	=		
L6	=	96.00	

Case Head

R	=	1.30
R1	=	11.90
R3	=	
E	=	3.20
E1	=	10.30
e min	=	1.00
δ	=	40°54'
f	=	0.30
β	=	45°

Powder Chamber

P1	=	11.86	
P2 1)*	=	10.40	-0.20

Junction Cone

α	=	25°59'21"
S	=	88.73
r1 min	=	0.50
r2	=	0.50

Collar

H1 *	=	9.08
H2 1)	=	9.08

Projectile

G1 1)	=	8.22
G2	=	
F	=	
L3+G 1)	=	108.70

Pressures (Energies)
Method Transducer

Pmax	=	4400	bar
PK	=	5060	bar
PE	=	5500	bar
M	=	25.00	
EE	=	4750	Joule

Miscellaneous Dimensions

Fe 1)	=	0.10
delta L	=	

CHAMBER MINI

Lengths

L1 *	=	66.13
L2 *	=	68.99
L3 1)	=	75.00

Breech

R	=	1.30
R1	=	11.95
R2	=	
R3	=	
r	=	

Powder Chamber

E	=	3.20
P1 1)	=	11.89
P2 *	=	10.43

Junction Cone

α 1)	=	25°59'20"
S	=	88.73
r1 max	=	0.50
r2	=	0.50

Collar

H1 *	=	9.11
H2 1)	=	9.10

Commencement of Rifling

G1 1)*	=	8.23
G 1)*	=	34.00
α1	=	180°
h	=	
s	=	
i 1)	=	0°17'11"
w	=	

Barrel

F 1)*	=	7.89
Z 1)	=	8.20

Grooves

b	=	4.40	
N	=	4	
u	=	240.00	
Q	=	51.78	mm²

Dimensions in << mm >>
Dimensions and Tolerances for Proof Barrels
see Appendix CR 1.

Notes: 1) Check for safety reasons
* Basic dimensions