C.I.P.	7,92 x 24 VBR Country of Origin: BE	TAB. I Date 07-05-14 Revision

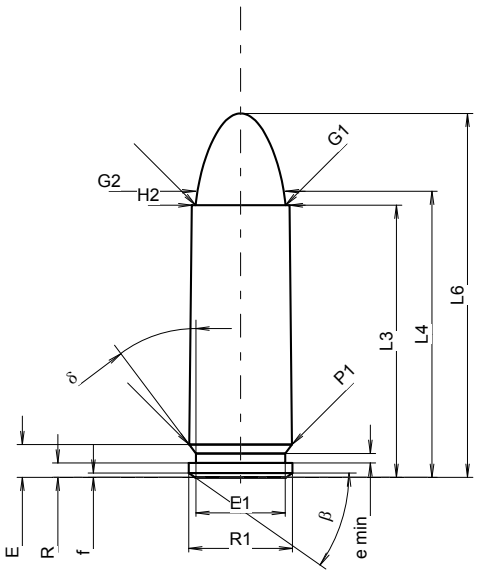

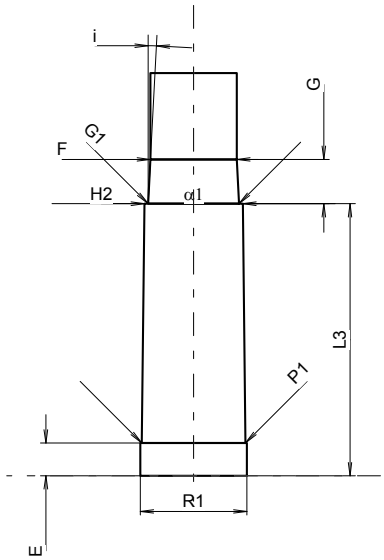

Scale 1.5:1

CARTRIDGE MAXI

Lengths

L1	=		-0.20
L2	=		-0.20
L3 1)	=	24.00	
L4	=	25.24	
L5	=		
L6	=	32.10	

Case Head

R	=	1.27
R1	=	9.14
R3	=	
E	=	2.90
E1	=	7.87
e min	=	0.84
δ	=	37°
f	=	0.38
β	=	35°

Powder Chamber

P1	=	9.06	
P2	=		-0.20

Junction Cone

α	=	
S	=	
r1 min	=	
r2	=	

Collar

H1	=	
H2 1)	=	8.62

Projectile

G1 1)	=	7.92
G2	=	7.92
F	=	
L3+G 1)	=	29.09

Pressures (Energies)
Method Transducer

Pmax	=	3310	bar
PK	=	3807	bar
PE	=	4300	bar
M	=	17.50	
EE	=	660	Joule

Miscellaneous Dimensions

Fe 1)6)	=	0.15
delta L	=	

CHAMBER MINI

Lengths

L1	=	
L2	=	
L3 1)	=	24.00

Breech

R	=	1.27
R1	=	9.40
R2	=	
R3	=	
r	=	

Powder Chamber

E	=	2.90
P1 1)	=	9.15
P2	=	

Junction Cone

α	=	
S	=	
r1 max	=	
r2	=	

Collar

H1	=	
H2 1)	=	8.69

Commencement of Rifling

G1 1)*	=	8.03
G 1)*	=	3.91
α1 *	=	180°
h	=	
s	=	
i 1)*	=	3°00'04"
w	=	

Barrel

F 1)*	=	7.62
Z 1)	=	7.82

Grooves

b	=	2.92	
N	=	6	
u	=	250.00	
Q	=	47.40	mm²

Dimensions in << mm >>
Dimensions and Tolerances for Proof Barrels
see Appendix CR 1.

Notes:
1) Check for safety reasons
6) Headspace on Case Mouth
* Basic dimensions