C.I.P.

7 mm SE v. H.

Country of Origin: DE

TAB.	I
Date	84-06-14
Revision	02-05-15

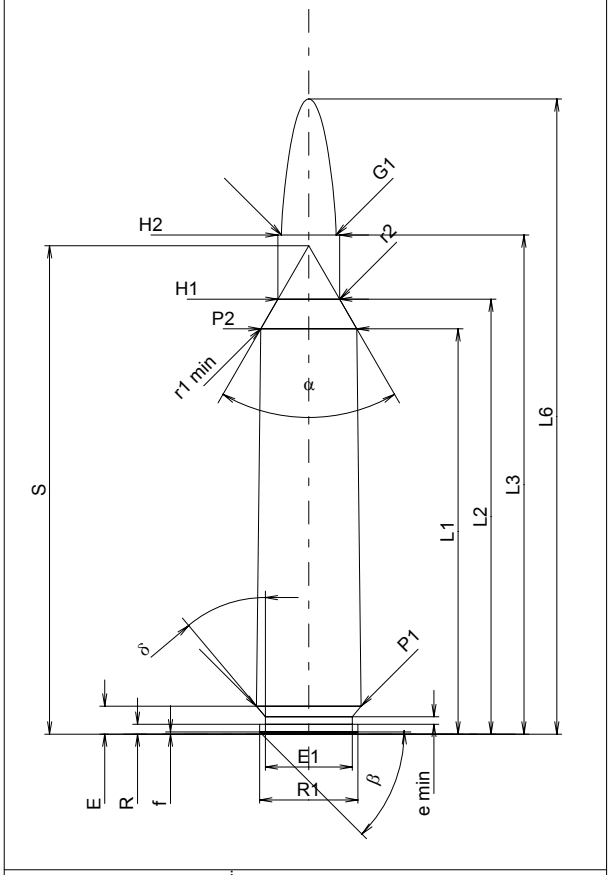

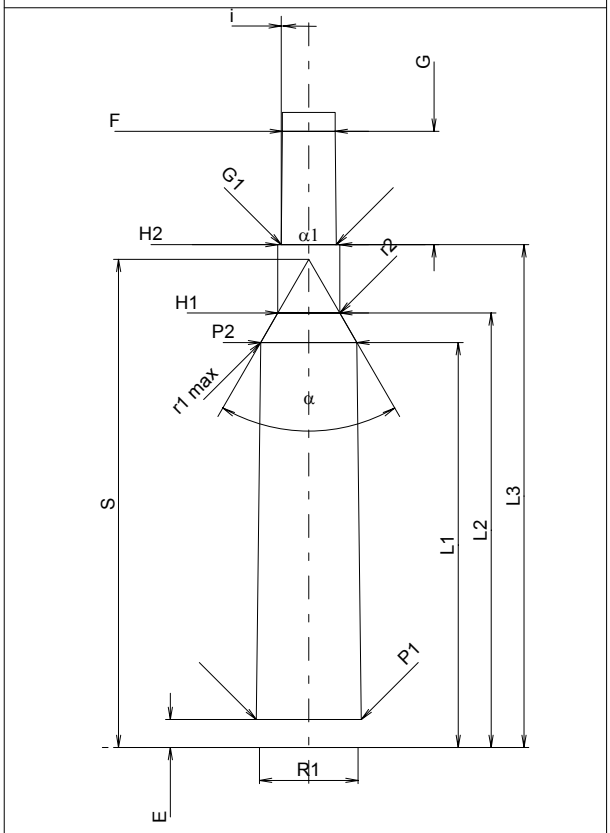

Scale 1:1

CARTRIDGE MAXI

Lengths

L1 1)*	=	53.60	-0.20
L2 1)*	=	57.52	-0.20
L3 1)	=	66.00	
L4	=		
L5	=		
L6	=	84.00	

Case Head

R	=	1.30
R1	=	13.00
R3	=	
E	=	3.70
E1	=	11.50
e min	=	1.00
δ	=	40°
f	=	0.30
β	=	45°

Powder Chamber

P1	=	13.85	
P2 1)*	=	12.70	-0.20

Junction Cone

α	=	60°02'21"
S	=	64.59
r1 min	=	0.50
r2	=	0.50

Collar

H1 *	=	8.17
H2 1)	=	8.17

Projectile

G1 1)	=	7.24
G2	=	
F	=	
L3+G 1)	=	81.00

Pressures (Energies)
Method Transducer

Pmax	=	4400	bar
PK	=	5060	bar
PE	=	5500	bar
M	=	25.00	
EE	=	4525	Joule

Miscellaneous Dimensions

Fe 1)	=	0.10
delta L	=	

CHAMBER MINI

Lengths

L1 *	=	53.56
L2 *	=	57.47
L3 1)	=	66.50

Breech

R	=	1.30
R1	=	13.05
R2	=	
R3	=	
r	=	

Powder Chamber

E	=	3.70
P1 1)	=	13.88
P2 *	=	12.73

Junction Cone

α 1)	=	60°03'21"
S	=	64.57
r1 max	=	0.50
r2	=	0.50

Collar

H1 *	=	8.21
H2 1)	=	8.20

Commencement of Rifling

G1 1)*	=	7.28
G 1)*	=	15.00
α1	=	180°
h	=	
s	=	
i 1)	=	0°34'22"
w	=	

Barrel

F 1)*	=	6.98
Z 1)	=	7.24

Grooves

b	=	4.00	
N	=	4	
u	=	260.00	
Q	=	40.47	mm²

Dimensions in << mm >>
Dimensions and Tolerances for Proof Barrels
see Appendix CR 1.

Notes: 1) Check for safety reasons
* Basic dimensions